Rating	Operating voltage:7V~33V DC Measuring Voltage:7-33V Voltage Tolerance: 1% 12V±0.1V , 24V±0.2V Measuring Current range:0~25.0A Current Tolerance: 5% 1A:±0.1A,10A:±0.5A,20A:±1.0A,25A±1.3A LED digital display. Reverse polarity protection.Surge protection up to 400W/36V
Insulation Resistance	DC 500V 100MΩ Min.
Operating Temperature	-20℃~50℃

Mounting Hole

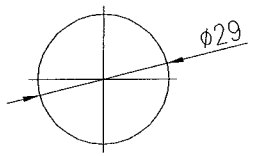

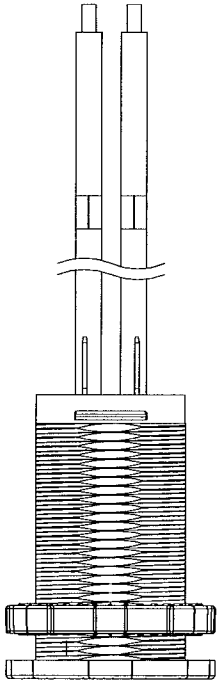

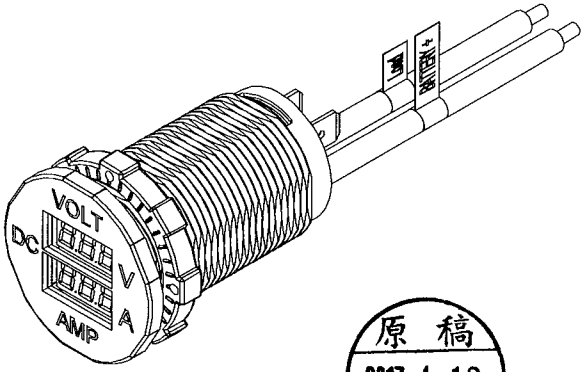

原稿
2017.4.12
研發部

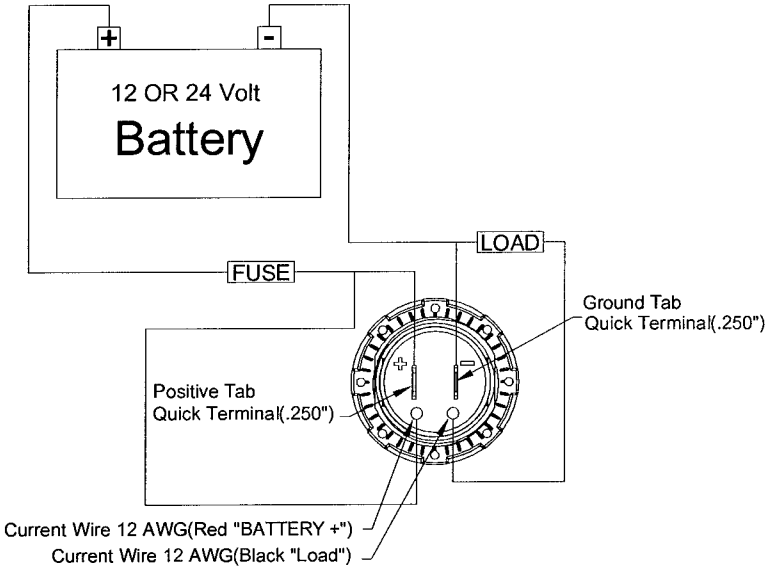

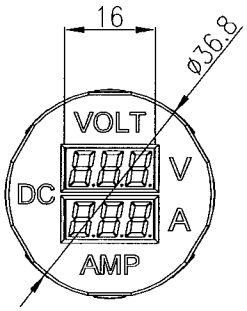

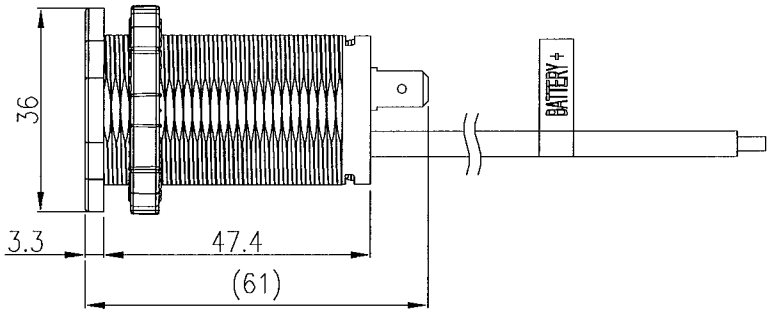

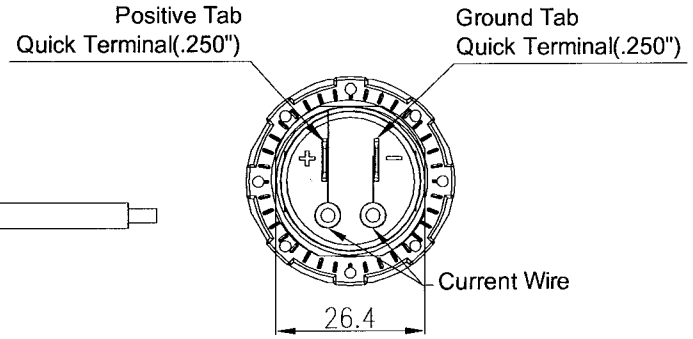

for SCI

Tolerances ±0.3 Unless Otherwise Specified

Date	Name	Description	No.
			△
			△

Drawn	Checked	Approved	SCI BOM No.	1570020	Model Name	DC Volt / Amp meter	
Rock Hsu		4/7 '17	Customer No.	112-A25-6B-BB3-R	Model No.	A25-6-BB3-R	Rev.
04/07/"17			Unit	mm	Shin Chin Industrial Co., Ltd.		0