Rating	Input:6V~33V DC Voltage Tolerance: +/- 1% (0.1V @ 12V, 0.2V @ 24V) Red LED display. Reverse polarity protection Surge protection up to 35V/400W
Insulation Resistance	DC 500V 100MΩ Min.
Operating Temperature	-20℃~50℃

Mounting Hole

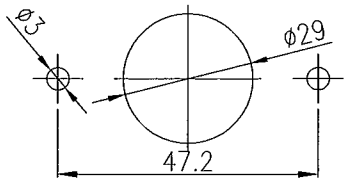

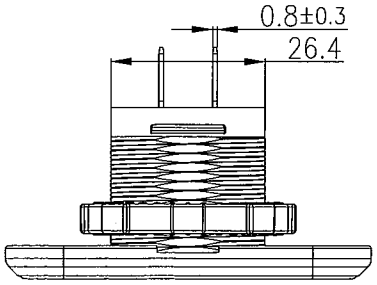

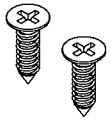

Screw in Bulk
Φ4XL14

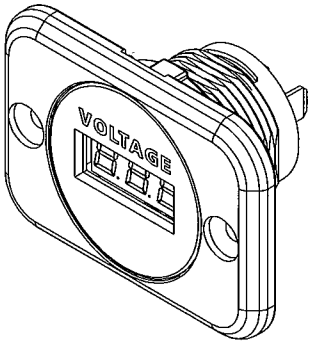

原稿
2018.3.31
研發部

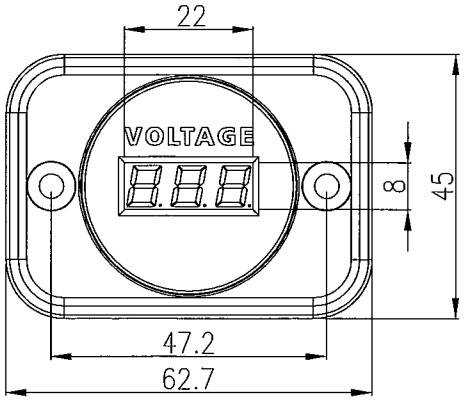

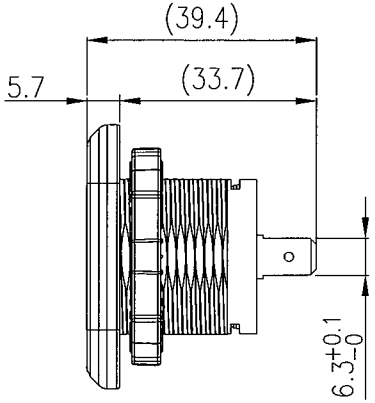

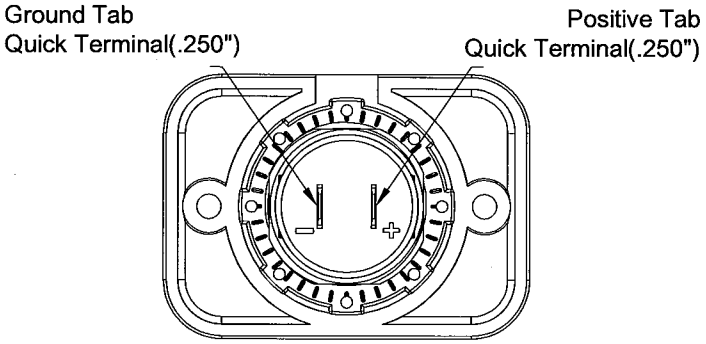

Tolerances ±0.3 Unless Otherwise Specified

Date	Name	Description	No.
			△
			△

Drawn	Checked	Approved	SCI BOM No.	1570041	Model Name	DC Voltmeter	
方婷鳳			Customer No.		Model No.	A25-1-PS1-BB3-R	Rev.
03/28/'18	3/29/'18	3/29/18	Unit	mm	Shin Chin Industrial Co., Ltd.		0