Rating	Input:6V~33V DC Voltage Tolerance: +/- 1% (0.1V @ 12V, 0.2V @ 24V) Green LED display. Reverse polarity protection Surge protection up to 35V/400W
Insulation Resistance	DC 500V 100MΩ Min.
Operating Temperature	-20℃~50℃

Mounting Hole

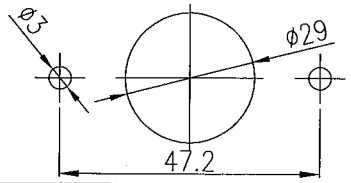

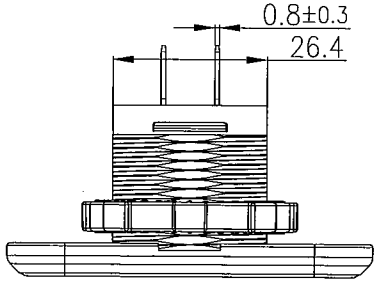

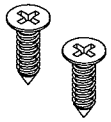

Screw in Bulk
Φ4XL14

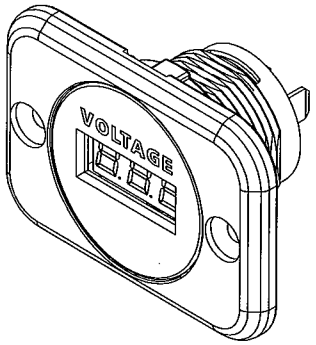

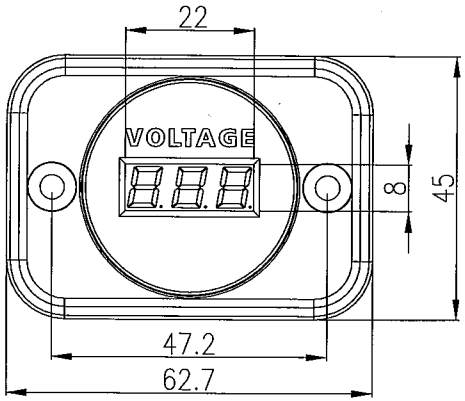

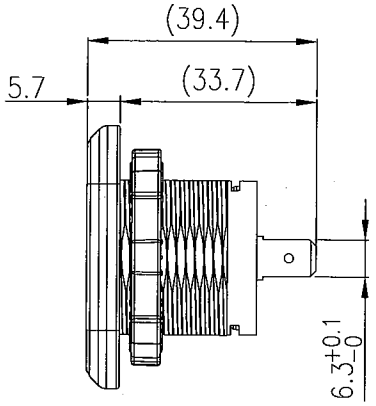

Ground Tab
Quick Terminal(.250")

Positive Tab
Quick Terminal(.250")

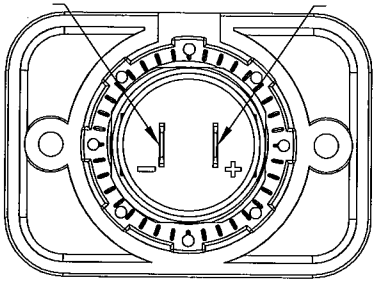

原稿
2019.3.08
研發部

Tolerances ±0.5 Unless Otherwise Specified

Date	Name	Description	No.
			△
			△

Drawn	Checked	Approved	SCI BOM No.	15700047	Model Name	DC Voltmeter	
方婷鳳			Customer No.		Model No.	A25-1-PS1-BB3-G	Rev.
02/27/'19	3/4/19	3/4/19	Unit	mm	Shin Chin Industrial Co., Ltd.		0