Rating	12V DC 10A Max
USB Rating	5V DC 2.1A
Insulation Resistance	DC 500V 100M ohm Min.
Dielectric Strength	AC 1000V 1 minute
Operation Temperature	0°~45°

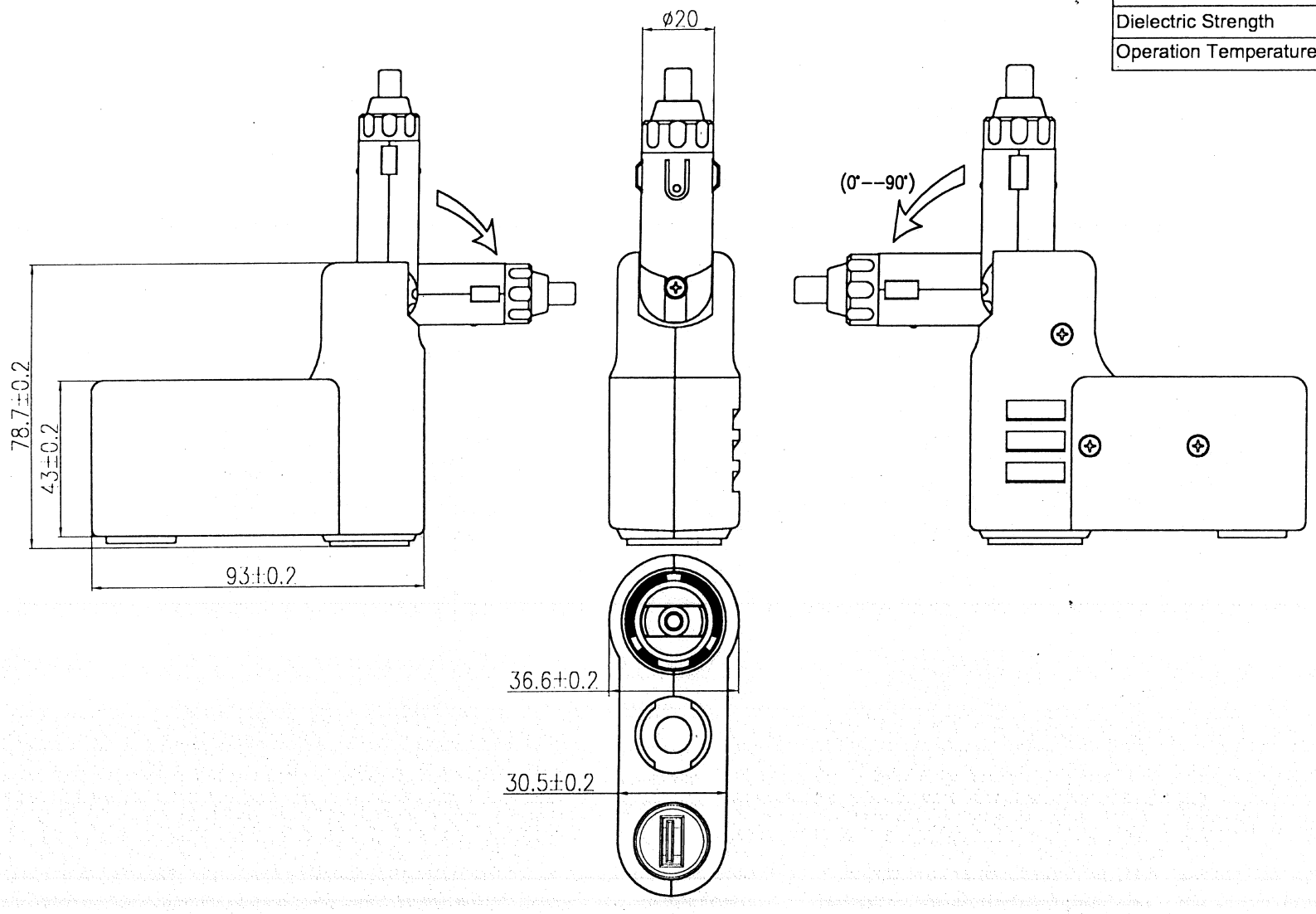

1. RATING: 12V,10A MAX
2. CIGAR LIGHTER LIGHTING TIME :25±5 SECS

Tolerances ±0.3 Unless Otherwise Specified

Date	Name	Description	No.
			△
			△

Drawn	Checked	Approved	SCI BOM No.	1251399	Model Name		
黃洋	[illegible]	[illegible]	Customer No	112-A13-43U	Model No.	A13-43U	Rev. 0
07/23/'15	11/25-'15	11/24-'15	Unit	mm	© Shin Chin Industrial Co., Ltd.		