Aug.1.2023 Copyright 2023 HIROSE ELECTRIC CO., LTD. All Rights Reserved.
In case of consideration for using Automotive equipment / device which demand high reliability, kindly contact our sales window correspondents.

	COUNT	DESCRIPTION OF REVISIONS	BY	CHKD	DATE		COUNT	DESCRIPTION OF REVISIONS	BY	CHKD	DATE
△						△					
△						△					
△						△					

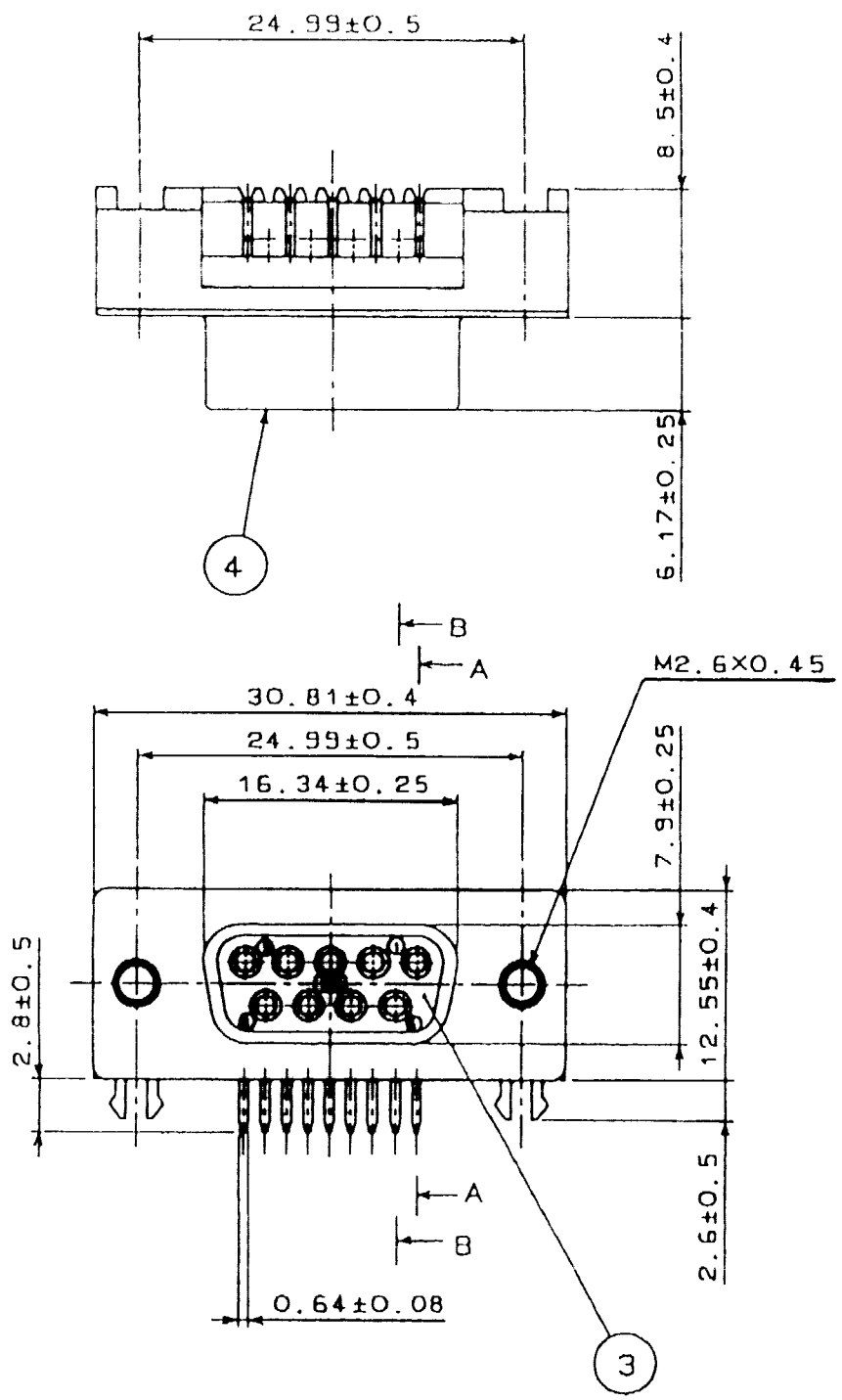

A-A

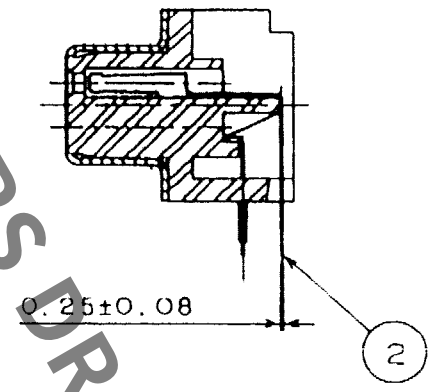

B-B

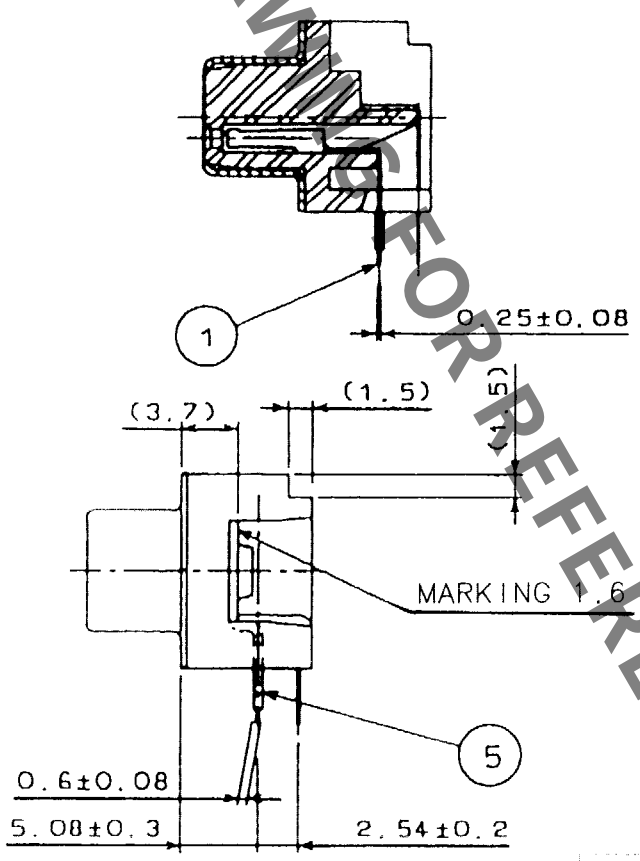

RECOMMENDED PC BOARD HOLE PATTERN
(SCALE 1/1)

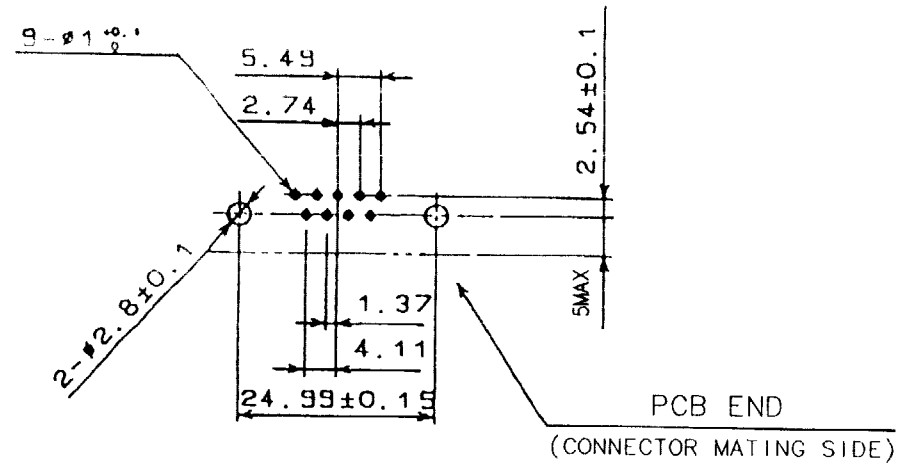

NOTES
1. PLEASE KEEP THE TOLERANCE TO LESS THAN ±0.1 FOR THE DIMENSIONS WITHOUT TOLERANCE.
2. THICKNESS OF PC BOARD SHALL BE 1.6mm.
3. REF.NO. (3) AND (4) SHALL BE TEMPORARILY.
   REF.NO. (3) AND (5) SHALL BE TEMPORARILY.
4. LOCK SCREW SHALL BE SOLD SEPARATELY.

HRS DRAWING FOR REFERENCE

NO.	MATERIAL	FINISH, REMARKS	NO.	MATERIAL	FINISH, REMARKS
3	PBT	UL94V-0(BLACK)			
2	PHOSPHOR BRONZE	SELECTIVE GOLD PLATING 0.2μm	5	BRASS	TIN PLATING
1	PHOSPHOR BRONZE	SELECTIVE GOLD PLATING 0.2μm	4	STEEL	NICKEL PLATING

CODE NO.(OLD)	DRAWN	DESIGNED	CHECKED	APPROVED	RELEASED
CL	T. Hamaguchi 03.8.26	T. Hamaguchi 03.8.26	Y. Enami 03.08.26	H. Miwa 03.08.28	. .

SCALE 2 : 1	DRAWING NO. EDC3-045903-01	PART NO. RDEG1-9SE1(50)
UNITS mm	HRS HIROSE ELECTRIC CO., LTD	CODE NO. CL211-5250-5-50 1/1

TO
Q

FORM NO.229