itron

Noritake

RoHS Compliant

Vacuum Fluorescent Display Module Specification

Model: GU140X16G-7000D

Specification No: DS-2145-0001-00

Date of Issue: September 13, 2023

Revision:

Published by
NORITAKE ITRON CORP. / Japan
https://www.noritake-itron.jp/

This specification is subject to change without prior notice.

This product complies with RoHS Directive
Please contact our sales consultant for details and to confirm the current status.

Notice for the Cautious Handling of VFD Modules

Handling and Usage Precautions:
Please carefully follow the appropriate product application notes for proper usage, safety handling, and operation standards for maximum performance.

[VFD tubes are made of glass]

- Because the edges of the VFD glass-envelop are not smooth, it is necessary to handle carefully to avoid injuries to your hands
- Please avoid breaking the VFD glass-envelop to prevent injury from sharp glass particles.
- Please design the PCB for the VFD-module within 0.3 mm warping tolerance to avoid any forces that may damage the display due to PCB distortion causing a breakdown of the electrical circuit leading to VFD failure.

[High voltage]

- Avoid touching conductive electrical parts, because the VFD-module uses high voltage exceeding 30 – 80 volts.
- Even when electric power is turned off, it may take more than one minute for the electrical current to discharge.

[Cable connection]

- Do not unplug the power and/or data cables of VFD-modules during operating condition because unrecoverable damage may result.
- Sending input signals to the VFD-module during a power off condition sometimes causes I/O port damage.
- It is recommended to use a 30 cm or shorter signal cable to prevent functional failures.

[Electrostatic charge]

- VFD-modules needs electrostatic free packaging and protection from electrostatic charges during handling and usage.

[Structure]

- During operation, VFD and VFD-modules generate heat. Please consider sufficient heat radiation dissipation using heat sink solutions.
- We prefer to use UL grade materials or components in conjunction with VFD-modules.
- Wrap and twist motion causes stress and may break VFDs & VFD modules. Please adhere to allowances within 0.3mm at the point of attachment.

[Power]

- Apply regulated power to the VFD-module within specified voltages to protect from failures.
- Because some VFD-modules may consume in rush current more than twice the typical current at power-on timing, we recommend using a sufficient power capability and quick starting of the power regulator.
- VFD-module needs a specified voltage at the point of connection. Please use an adequate power cable to avoid a decrease in voltage. We also recommend inserting a power fuse for extra protection.

[Operating consideration]

- Illuminating phosphor will decrease in brightness during extended operation. If a fixed pattern illuminates for an extended period, (several hours), the phosphor efficiency will decrease compared to the non-operating phosphor causing a non-uniform brightness among pixels. Please consider programming the display patterns to use all phosphor segments evenly. Scrolling may be a consideration for a period of time to refresh the phosphor condition and improve even illumination to the pixels.
- We recommend using a signal cable 30cm or less to avoid some possible disturbances to the signal.

[Storage and operating environment]

- Please use VFD-modules under the recommended specified environmental conditions. Salty, sulfur and dusty environments may damage the VFD-module even during storage.

[Discard]

- When discarding VFDs or VFD-modules, please adhere to governmental related laws or regulations.

[Others]

- Although the VFD-module is designed to be protected from electrical noise, please plan your circuitry to exclude as much noise as possible.
- Do not reconstruct or repair the VFD-module without our authorization. We cannot assure the quality or reliability of unauthorized reconstructed VFD-modules.

Notice:

- We do not authorize the use of any patents that may be inherent in these specifications.
- Neither whole nor partial copying of these specifications are permitted without our approval. If necessary, please ask for assistance from our sales consultant.
- This product is not designed for military, aerospace, medical or other life-critical applications. If you choose to use this product for these applications, please ask us for prior consultation or we cannot take responsibility for problems that may occur.

Index.

Notice for the Cautious Handling of VFD Modules 2
1 General Description 5
1.1 Scope 5
1.2 Construction 5
1.3 Outline 5
1.4 Weight 5
1.5 Block Diagram 5
2 Electrical specification 6
2.1 Absolute Maximum Ratings 6
2.2 Electrical Ratings 6
2.3 Electrical Characteristics 6
3 Optical Specifications 7
4 Environmental Specifications 7
5 Interface 8
5.1 Type of interface 8
5.2 Parallel interface 8
5.2.1 Basic function 8
5.2.2 Interface timing 8
5.3 Serial interface 9
5.3.1 Basic function 9
5.3.2 Asynchronous serial interface timing 9
5.4 Reset timing 9
6 Display specification 10
6.1 Displayable image types 10
6.1.1 Graphic display 10
6.1.2 Character display 10
6.2 Display Memory 10
6.3 Window 11
6.3.1 Base-Window 11
6.3.2 User-Window 11
6.4 Write screen mode for “Base Window” 12
6.4.1 Display screen mode 12
6.4.2 All screen mode 12
6.5 Character display format 13
7 Function 14
7.1 Commands 14
7.1.1 Character display 14
7.1.2 BS (Back Space) 15
7.1.3 HT (Horizontal Tab) - 1 character to right 15
7.1.4 LF (Line Feed) 16
7.1.5 HOM (Home Position) 16
7.1.6 CR (Carriage Return) 16
7.1.7 US $ xL xH yL yH (Cursor Set) 16
7.1.8 CLR (Display Clear) 16
7.1.9 US C n (Cursor display ON/ OFF) 17
7.1.10 ESC@ (Initialize Display) 17
7.1.11 ESC % n (Download Character ON/ OFF) 17
7.1.12 ESC & a c1 c2 [x1 d1...d(a×x1)]...[xk d1...d(a×xk)] (Download Character definition) 18
7.1.13 ESC ? a c (Download Character delete) 18
7.1.14 ESC R n (International font set) 19
7.1.15 ESC t n (Character table type) 19
7.1.16 US MD1 (Over-write mode) 19
7.1.17 US MD2 (Vertical scroll mode) 19
7.1.18 US MD3 (Horizontal scroll mode) 19
7.1.19 US s n (Horizontal scroll speed) 20
7.1.20 US r n (Reverse display) 20

7.1.21 US w n (Write mixture display mode) 20
7.1.22 US X n (Brightness level setting) 20
7.1.23 US (a n [parameter] (Display action command group) 21
7.1.24 <Function 01h> US (a n t (Wait) 21
7.1.25 <Function 10h> US (a n wL wH cL cH s (Scroll display action) 21
7.1.26 <Function 11h> US (a n p t1 t2 c (Display blink) 22
7.1.27 <Function 40h> US (a n p (Screen Saver) 22
7.1.28 US (f n [parameter] (Bit image display group) 22
7.1.29 <Function 11h> US (f n xL xH yL yH g d(1)...d(k) (Real-time bit image display) 23
7.1.30 US (d n [parameter] (Dot unit command group) 23
7.1.31 <Function 20h> US (d 20h xPL xPH yPL yPH m aL aH aE ySL ySH xOL xOH yOL yOH xL xH yL yH g (Dot unit downloaded bit image display) 24
7.1.32 <Function 21h> US (d 21h xPL xPH yPL yPH xL xH yL yH g d(1)...d(k) (Dot unit real-time bit image display) 25
7.1.33 <Function 30h> US (d 30h xPL xPH yPL yPH m bLen d(1)...d(bLen) (Dot unit character display) 26
7.1.34 US (g n [parameter] (Font command group) 27
7.1.35 <Function 03h> US (g n w (Font width) 27
7.1.36 <Function 40h> US (g n x y (Font magnification) 28
7.1.37 US (w n [parameter] (Window command group) 28
7.1.38 <Function 01h> US (w n a (Current window select) 28
7.1.39 <Function 02h> US (w n a b[xPL xPH yPL yPH xSL xSH ySL ySH] (User Window define / cancel) 29
7.1.40 <Function 10h> US (w n a (Write screen mode select) 30
7.1.41 WINx (Window select shortcut) 30
7.2 Bit image data format 31
8 Setup 32
8.1 Jumper 32
8.1.1 Baud rate select 32
8.1.2 Signal select of Pin#3 of 14 through-holes for Parallel I/F 32
9 Connector 33
9.1 Parallel interface connecter (Through-holes) CN1 33
9.2 Serial interface connector (Through-holes) CN2 33
9.2.1 Asynchronous serial interface 33
10 Firmware Version Notation 33
11 Outline Drawing 34
12 Revision Note 35

1 General Description

1.1 Scope

This specification covers the operation and operating requirements of the vacuum fluorescent graphic display module GU140X16G-7000D.

1.2 Construction

The module consists of a 140 x 16dot graphic VFD, refresh RAM, character generator, DC/DC converter, display controller, and all necessary control logic. The module can simultaneously display graphic patterns and/or characters on the screen.

1.3 Outline

Power supply:	+5 VDC only
Interface:	Parallel interface (CMOS)
	Serial interface (Asynchronous, input only, RS-232 level)
Function:	Character display, 5 x 7, Attribution
	(5 x 7Character font, refer to spec. of DS-898-0002-xx)
	Graphic display
	Control command
	Character download function
	Screen Saver function

Applicable reliability specification:	TT-99-3102x
Applicable module production specification:	TT-98-3413x
Applicable VFD quality specification:	TT-93-3336x

– The revision number is indicated by "x".

1.4 Weight

Approximately 39g

1.5 Block Diagram

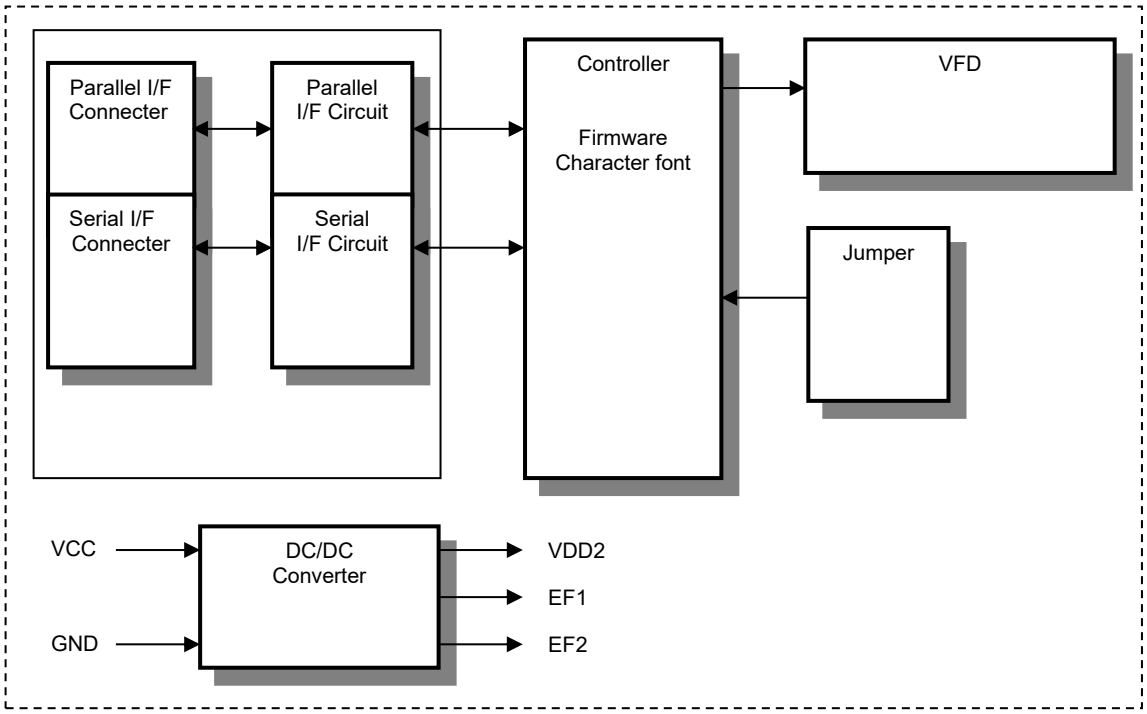

2 Electrical specification

2.1 Absolute Maximum Ratings

Parameter	Symbol	Min.	Typ.	Max.	Unit
Power Supply Voltage	VCC	-0.3	-	+6.0	VDC
Logic Input Voltage D0-D7, /WR,/RD, /RESET	VIN1	-0.3	-	VCC+0.3	VDC
Logic Input Voltage SIN	VIN2	-20.0	-	+20.0	VDC

2.2 Electrical Ratings

Parameter	Symbol	Min.	Typ.	Max.	Unit
Power Supply Voltage	VCC	4.75	5.00	5.25	VDC

All driving voltage for the VFD is converted from the DC/DC converter on board.

2.3 Electrical Characteristics

Measuring Conditions: Ambient temperature = 25degrees C, VCC =5.0VDC

Parameter		Symbol	Min.	Typ.	Max.	Unit	Condition	Note
“L” Level Logic Input Current	D0-D7, /WR, /RD	IIL1-1	-	-	-0.15	mA	VIN1=0V	-
	/RESET	IIL1-2	-	-	-0.6	mA	VIN1=0V	-
“H” level Logic Input Current D0-D7, /WR, /RD, /RESET		IIH1	-	-	1.0	uADC	VIN1=5V	-
Logic Input Voltage D0-D7, /WR, /RD, /RESET	"H"	VIH1	0.8VCC	-	VCC	VDC	-	-
	"L"	VIL1	0	-	0.2VCC	VDC	-	-
Logic Output Voltage D7(PBUSY flag), PBUSY	"H"	VOH1	3.8	-	VCC	VDC	IOH1=-1.5mA	-
	"L"	VOL1	0	-	0.6	VDC	IOL1=1.6mA	-
Logic input resistance SIN		RIN2	3	-	-	kOhm	-	-
Logic Input Voltage SIN	"H"	VIH2	3.0	-	+15.0	VDC	-	-
	"L"	VIL2	-15.0	-	0.5	VDC	-	-
Logic Output Voltage SBUSY	"H"	VOH2	4.0	-	VCC	VDC	RL=3kOhm	-
	"L"	VOL2	0	-	0.5	VDC	RL=3kOhm	-
Power Supply Current 1		ICC-1	-	240	300	mADC	-	(1)
Power Supply Current 2		ICC-2	-	200	250	mADC	-	(2)
Power Supply Current 3		ICC-3	-	14	19	mADC	-	(3)
Power Consumption		P1	-	1.2	1.5	W	-	(1)

(1) ICC-1 shows the current at all dots in the screen are lighted.
(2) ICC-2 shows the current at all dots off.
(3) ICC-3 shows the current at Display Power OFF (Power save mode). Refer to “**7.1.27 Screen Saver**”.

Note

Inrush current at power-on may exceed twice normal current. It is recommended to use a power supply with sufficient capacity.

The rise time of supply voltage should not exceed 100ms.

“SBUSY” is open collector terminal. (Rpd: Pull down by 10k ohm)

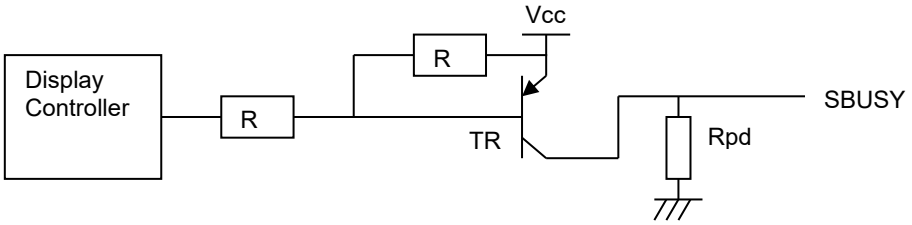

3 Optical Specifications

Number of dots:	2,240（140 x 16）
Display area:	69.85mm x 11.45mm (X x Y)
Dot size:	0.350mm x 0.575mm (X x Y)
Dot pitch:	0.500mm x 0.725mm (X x Y)
Luminance:	350cd/m^2 Min.
Color of illumination:	Green (Blue Green)

4 Environmental Specifications

Operating temperature:	-40 to +85 degrees C
Storage temperature:	-40 to +85 degrees C (-60 to -40 ºC for less than 168 hours.)
Operating humidity:	20 to 80 % R.H (Non Condensing)
Storage humidity:	20 to 80 % R.H (Non Condensing)
Vibration:	10-55-10Hz, all amplitude 1mm, 30Min., X-Y-Z (Non-operating)
Shock:	392m/s^2 (40G) 9mS X-Y-Z, 3times each direction (Non-operating)

5 Interface

5.1 Type of interface

The following interfaces are available on this module;
Parallel interface (CMOS)
Serial interface (Asynchronous, input only, RS-232 level)

5.2 Parallel interface

5.2.1 Basic function

The module sets the PBUSY line upon receipt of data, and clears the line when ready to receive more data. PBUSY is readable by Status read of D7 bit or PBUSY signal directly.
RS terminal is reserved for switching of data and command. This is not available on this module. Please do not use this terminal.

Operation	/WR	/RD	RS	D0 - D7
Data Write	0 -> 1	1	X	D0 - D7: Data Write
Status Read (Data Read)	1	0	X	D0 - D6: Indefinite D7: PBUSY Flag 1:BUSY, 0:READY

5.2.2 Interface timing

Data Write timing

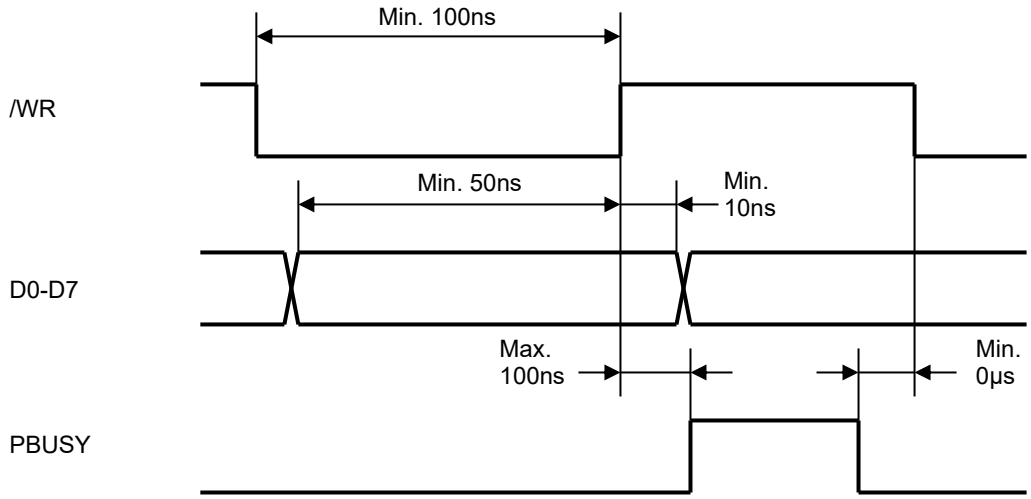

Data Read timing

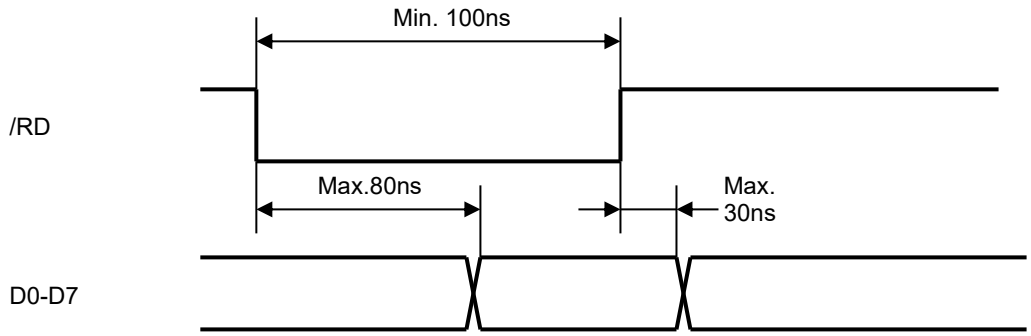

5.3 Serial interface

5.3.1 Basic function

There is an Asynchronous serial interface, supporting RS-232 level input only. The module sets the SBUSY line upon receipt of data, and clears the line when ready to receive more data.

5.3.2 Asynchronous serial interface timing

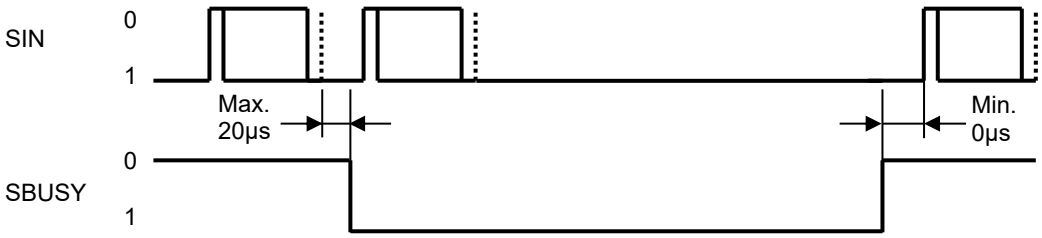

Interface:

Baud rate	9,600 / 19,200 / 38,400 / 115,200bps (Set by Jumper.)
Parity	None
Format	Start (1 bit) + Data (8 bit) + Stop (1 bit)
Handshake	SBUSY

Receiving Buffer Capacity: 252 bytes

SBUSY signal change timing

SBUSY	BUSY(‘H’)	READY(‘L’)
Condition	Data in receive buffer	No data in receive buffer

Received data can be stored up to the capacity of the receive buffer, however it is recommended to not send data when SBUSY=BUSY.

5.4 Reset timing

Reset pulse (active low) should be longer than 1ms.
The module sets the SBUSY/ PBUSY line upon receipt of Reset signal and clears the line when ready to receive data.

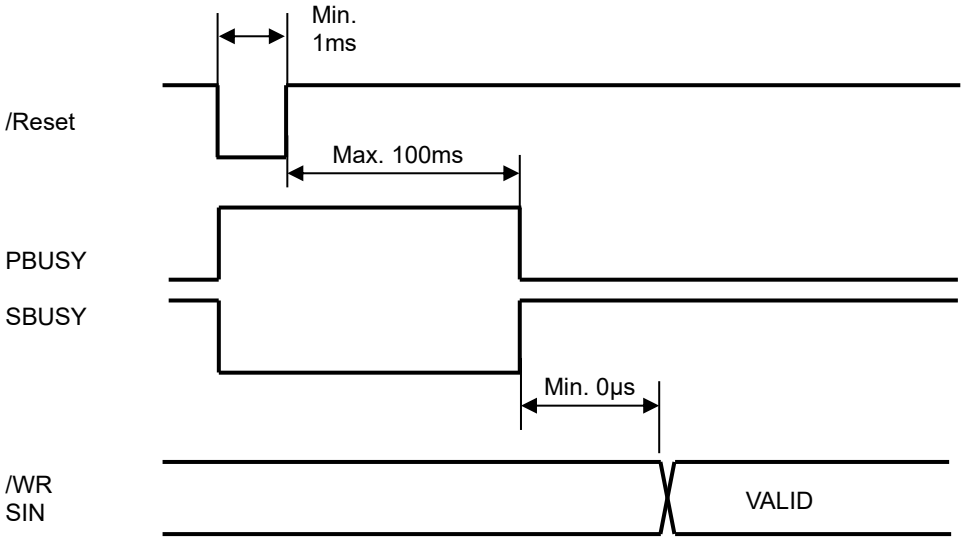

6 Display specification

6.1 Displayable image types

6.1.1 Graphic display

Number of dot: 140 x 16 dots

6.1.2 Character display

Character mode: 5 x 7 dot
Character font type: 5 x 7 dot - Characters, ANK, International font
Character display width: Fixed character format 1 & 2, Proportional character format 1 & 2.
Attribution: Character magnify, Reverse

6.2 Display Memory

Size: 512 x 16 dots - separated as: Display area (140 x 16 dots) / Hidden area (372 x 16 dots).
Display Memory is comprised of Display area and Hidden area, as shown below.
By using “User Window” function, the memory area can be separated, and each separate window can be controlled independently (refer to “**7.1.37 Window command group**”).
Hidden area can be displayed by using scroll or other action commands (refer to “**7.1.23 Display action command group**”).

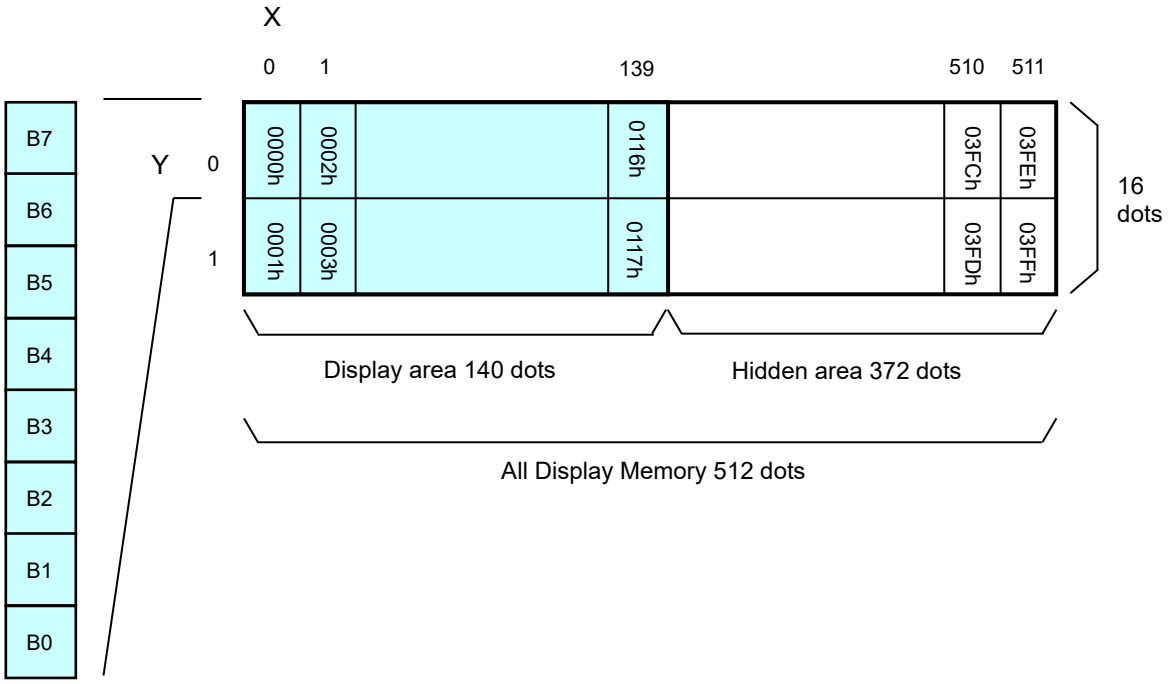

6.3 Window

Window function enables the display screen to be divided into “Windows”, each of which can be controlled and displayed independently.
Display Memory is shared by all windows; individual windows do not have their own display memory. There are 2 types of “window”: Base-Window and User-Window.
Refer to “**7.1.37 Window command group**”.

6.3.1 Base-Window

Base-Window covers the entire display screen. If no User-Windows are defined, all display operation is processed on this window. If one or more User-Windows are defined, display operation on any area not covered by a User-Window is done by selecting Base-Window.
When Base-Window is selected, even if User-Window(s) are defined, all display operation is processed under Base-Window. Therefore the current display contents of User-Window(s) is overwritten.

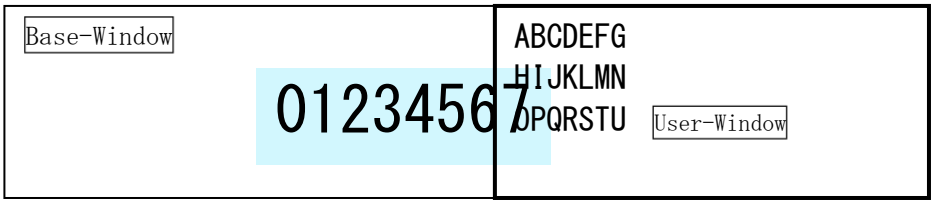

6.3.2 User-Window

User-Window is defined by “User Window define / cancel” command.
Display operation is processed on the window selected by Current Window select command.
A maximum of 4 User-Windows can be defined.
Refer to “**7.1.38 Current window select**” and “**7.1.39 User Window define / cancel**”.

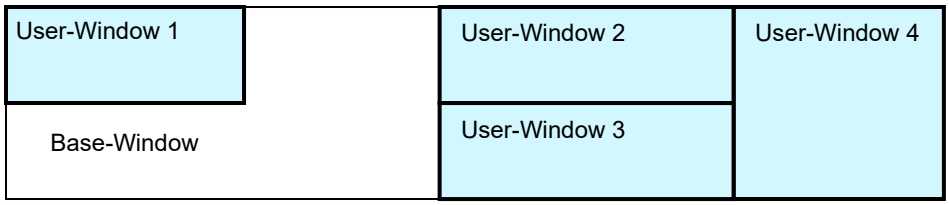

6.4 Write screen mode for "Base Window"

This setting is only applicable for Base-Window.

There are two Write screen modes, Display screen mode and All screen mode. The mode is set by command (Refer to the commands "**7.1.37 Window command group**" and "**7.1.40 Write screen mode select**").

6.4.1 Display screen mode

When the cursor is located in the Display area, all operation will be done within the Display area, and when the cursor is located in the Hidden area, it will be done within the Hidden area.

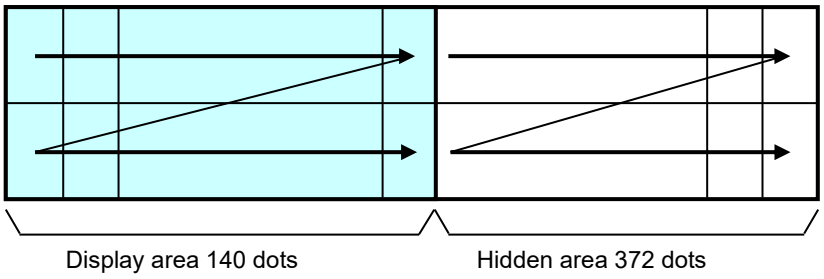

6.4.2 All screen mode

Regardless of the cursor position, operation will be done over the entire area.

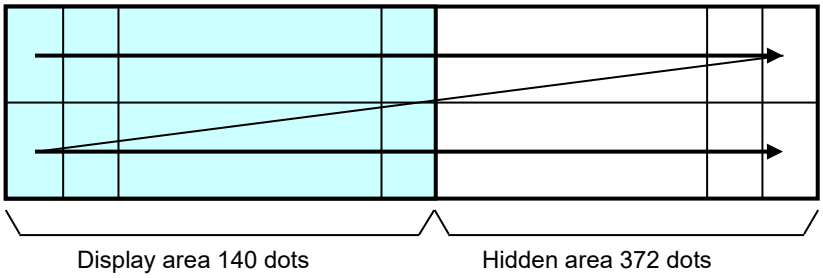

6.5 Character display format

Character display format is following selectable by “Font width” command. Refer to “**7.1.35 Font width**”.

Type of character	Display position	Format	Fixed character width 1	Fixed character width 2	Proportional character width 1	Proportional character width 2
Standard character and Download Character 5 x 7dot	Y = 0 (Top line)	Character format	5 x 7	5 x 7	n x 7	n x 7
		Upper space	0	0	0	0
		Lower space	1	1	1	1
		Left space	0	1	0	1
		Right space	1	1	1	1
	Y = 1 (Bottom line)	Character format	5 x 7	5 x 7	n x 7	n x 7
		Upper space	1	1	1	1
		Lower space	0	0	0	0
		Left space	0	1	0	1
		Right space	1	1	1	1
Download Character 7 x 8dot	Y = 0 (Top line) Y = 1 (Bottom line)	Character format	6 x 8 *	7 x 8	6 x 8 *	7 x 8
		Upper space	0	0	0	0
		Lower space	0	0	0	0
		Left space	0	0	0	0
		Right space	0	0	0	0

* The left-most 6 x 8 dot part of the 7 x 8 dot character is displayed.

Note: When proportional character width is specified, the blank character (20h) is treated as a 2-dot width character.

Fixed character width 1

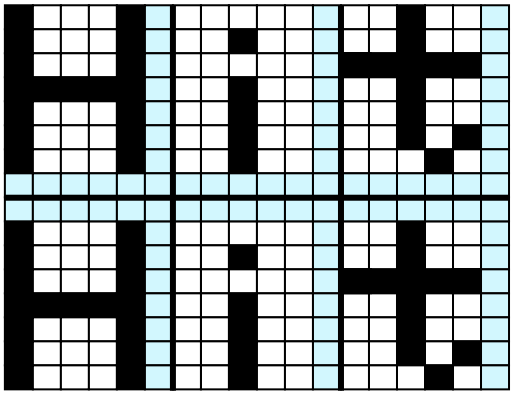

Fixed character width 2

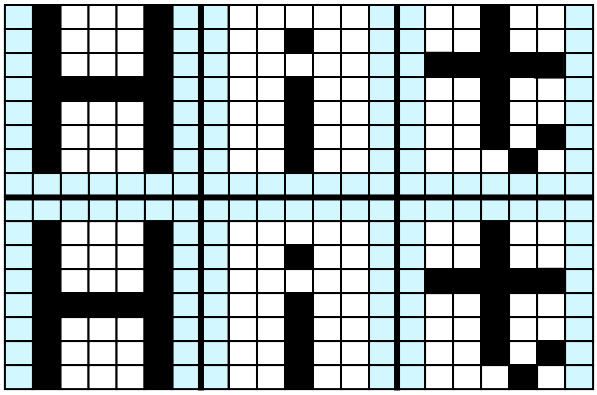

Proportional character width 1

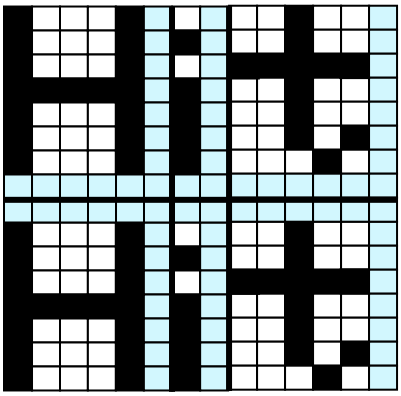

Proportional character width 2

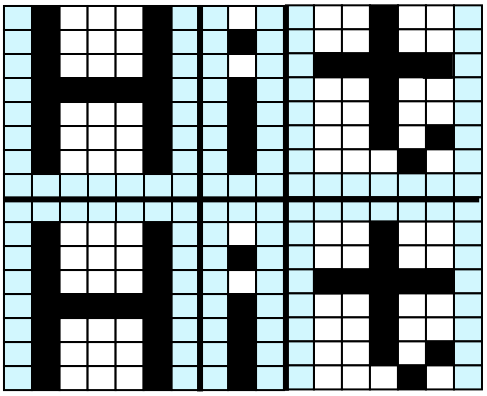

7 Function

7.1 Commands

This section describes the operation of each command.

Note:

The character size (X x Y dot) referred to in this section depends on the “Font width” and “Font magnified display” command settings.

Number of X dot and Y dot for one character for commands other than “Character display” under the condition of each Font width are as follows:

Character type	Fixed character width 1	Fixed character width 2	Proportional character width 1	Proportional character width 2
Number of X dot	5 + 1	5 + 2	5 + 1	5 + 2
Number of Y dot	7 + 1	7 + 1	7 + 1	7 + 1

MD1 mode, MD2 mode, and MD3 mode, described below, refer to Over-write mode, Vertical scroll mode, and Horizontal scroll mode respectively. (To select the mode, refer to the commands “**7.1.16 Over-write mode**”, “**7.1.17 Vertical scroll mode**”, and “**7.1.18 Horizontal scroll mode**”.)

7.1.1 Character display

Code: 20h – FFh

Function: Display character at cursor position.
This command operates on the current window. (Refer to “Current window Select”).

When MD1 mode (Over-write mode) is selected.

Cursor position		**Operation**
X direction	**Y direction**	
Space for one character on right side.	-	Display >> HT
Right end.	Space for one line below.	HT >> Display >> HT
	No space for one line below.	HT >> Display >> HT

When MD2 mode (Vertical scroll mode) is selected.

Cursor position		**Operation**
X direction	**Y direction**	
Space for one character on right side.	-	Display >> HT
Right end.	Space for one line below.	HT >> Display >> HT
	No space for one line below.	HT >> Display >> HT

When MD3 mode (Horizontal scroll mode) is selected.

Cursor position		**Operation**
X direction	**Y direction**	
Space for one character on right side.	-	Display >> HT
Right end.	-	HT >> Display >> HT

7.1.2 BS (Back Space)

Code: 08h
Function: Cursor moves to the left by one character.
This command has effect for the current window.

When MD1 (Over-write mode) and MD2 (Vertical scroll mode) modes is selected.

Cursor position		Operation
X direction	**Y direction**	
Space for one character on left side.	-	Cursor moves left by one character.
Left end.	Space for one line above.	Cursor moves to right end of next upper line.
	No space for one line above.	Cursor does not move.

When MD3 mode (Horizontal scroll mode) is selected.

Cursor position		Operation
X direction	**Y direction**	
Space for one character on left side.	-	Cursor moves left by one character.
Left end.	-	Cursor does not move.

7.1.3 HT (Horizontal Tab) - 1 character to right

Code: 09h
Function: Cursor moves to the right by one character.
This command has effect for the current window.

When MD1 mode (Over-write mode) is selected.

Cursor position		Operation
X direction	**Y direction**	
Space for one character on right side.	-	Cursor moves right by one character.
Right end.	Space for one line below.	Cursor moves to left end of next lower line.
	No space for one line below.	Cursor moves to left end of top line.

When MD2 mode (Vertical scroll mode) is selected.

Cursor position		Operation
X direction	**Y direction**	
Space for one character on right side.	-	Cursor moves right by one character.
Right end	Space for one line below.	Cursor moves to left end of next lower line.
	No space for one line below.	Display contents are scrolled up by one line and the bottom line is cleared. Cursor moves to left end of bottom line.

When MD3 (Horizontal scroll mode) mode is selected.

Cursor position		Operation
X direction	**Y direction**	
Space for one character on right side.	-	Cursor moves right by one character.
Right end	-	Contents of current line scroll left by one character, right end character is cleared, and cursor moves to the right end.

7.1.4 LF (Line Feed)

Code: 0Ah
Function: Cursor moves to next lower line.
This command has effect for the current window.

When MD1 mode (Over-write mode) is selected.

Cursor position		Operation
X direction	Y direction	
-	Space for one line below.	Cursor moves to the same position on next lower line.
	No space for one line below.	Cursor moves to the same position on top line.

When MD2 mode (Vertical scroll mode) is selected.

Cursor position		Operation
X direction	Y direction	
-	Space for one line below.	Cursor moves to the same position on next lower line.
	No space for one line below.	Display contents are scrolled up by one line and the bottom line is cleared. Cursor does not move.

When MD3 mode (Horizontal scroll mode) is selected.

Cursor position		Operation
X direction	Y direction	
-	-	Cursor does not move.

7.1.5 HOM (Home Position)

Code: 0Bh
Function: Cursor moves the home position (top left).
This command has effect for the current window.

7.1.6 CR (Carriage Return)

Code: 0Dh
Function: Cursor moves to left end of current line.
This command has effect for the current window.

7.1.7 US $ xL xH yL yH (Cursor Set)

Code: 1Fh 24h xL xH yL yH
xL: Cursor position x Lower byte (1 dot/ unit)
xH: Cursor position x Upper byte (1 dot/ unit)
yL: Cursor position y Lower byte (8 dot/ unit)
yH: Cursor position y Upper byte (8 dot/ unit)
Definable area: 0000h ≤ (xL + xH × 100h) ≤ 01FFh
0000h ≤ (yL + yH × 100h) ≤ 0001h
Function: The cursor moves to specified X, Y position on Display Memory.
If the specified X, Y position (X and/or Y) is outside the definable area, or outside the currently-selected window, the command is ignored and the cursor remains in the same position.
This command effects on the currently-selected window by “Current window select”.

7.1.8 CLR (Display Clear)

Code: 0Ch
Function: Display screen is cleared and cursor moves to home position.
This command has effect for the current window.

7.1.9 US C n (Cursor display ON/ OFF)

Code: 1Fh 43h n

n: Cursor display setting

Definable area: 00h ≤ n ≤ 01h

n = 00h: Cursor display OFF

n = 01h: Cursor display ON

Default: n = 00h

Function: Select cursor ON or OFF.
When cursor display is ON, cursor position appears as reverse blinking, 1 x 8 dots.
When cursor is in Hidden Area, it does not appear, even when cursor display is set ON.
This command has effect for the current window.

7.1.10 ESC@ (Initialize Display)

Code: 1Bh 40h

Function: Settings return to default values.
Jumper settings are not re-loaded.
The contents of receive buffer remain in memory.

7.1.11 ESC % n (Download Character ON/ OFF)

Code: 1Bh 25h n

n: Download Characters setting

Definable area: 00h ≤ n ≤ 01h

n = 00h: Disable (Characters already downloaded, defined, and displayed are not affected.)

n = 01h: Enable (If Download Character is not defined, built-in character is displayed.)

Default: n = 00h

Function: Specify enable or disable for Download Character.

7.1.12 ESC & a c1 c2 [x1 d1...d(a×x1)]...[xk d1...d(a×xk)] (Download Character definition)

Code: 1Bh 26h a c1 c2 [x1 d1…d(a×x1)]…[xk d1…d(a×xk)]

a:	Select character type
c1:	Start character code
c2:	End character code
x:	Number of dot for X-direction
d:	Defined data

Definable area: a = 01h
20h ≤ c1 ≤ c2 ≤ FFh
x = 05h: 5 x 7 dot font/ Upper 7 bit is valid.
x = 07h: 7 x 8 dot font/ All 8 bit is valid.
00h ≤ d ≤ FFh
k = c2 - c1 + 1

Function: Define Download Characters into RAM.
A maximum of 16 Download Characters can be defined.

x = 05h:	Defined by 5 x 7dot, and 5 x 7 dot character regulated upper and lower space is displayed as same as standard character display.
x = 07h:	Defined by 7 x 8 dot, and 6 x 8 or 7 x 8 dot character unrelated to space is displayed. (Refer to "**6.5 Character display format**").

After the maximum number of Download Characters are defined, in order to define other character codes, space must first be obtained using the Download Character delete command.
Downloaded Characters are valid until redefined, an initialize (ESC @) sequence is executed, or the power is turned off.
To display Download Characters the commands "Download Character definition" and "Download Character ON/ OFF" (set to enable) are required.
If a currently-displayed Download Character is re-defined, there is no effect on the currently-displayed character. It is effective only for newly input characters.

(5 x 7 dot)

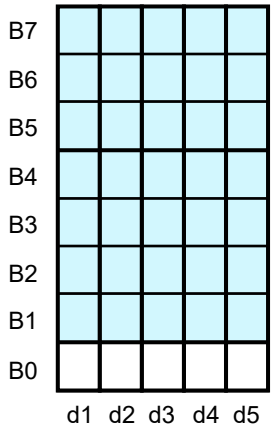

(7 x 8 dot)

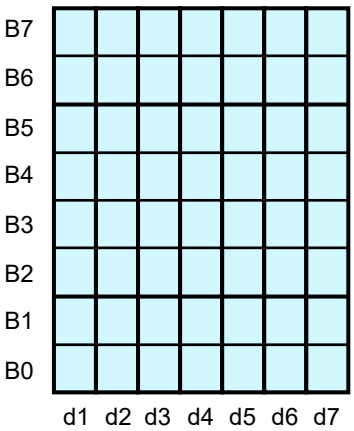

7.1.13 ESC ? a c (Download Character delete)

Code: 1Bh 3Fh a c

a:	Select character type
c:	Character code for delete

Definable area: a = 01h
20h ≤ c ≤ FFh

Function: Delete defined Download Character.
The built-in character is displayed after this command is executed.
It does not affect to the displaying Download Character.
This command is ignored if character code for Download Character is not defined.

7.1.14 ESC R n **(International font set)**

Code: 1Bh 52h n

n: International font set setting

Definable area: 00h ≤ n ≤ 0Dh

Default: n = 00h

Function: Select International font set.
Characters already displayed are not affected.

n	Font set
00h	America
01h	France
02h	Germany
03h	England
04h	Denmark 1
05h	Sweden
06h	Italy
07h	Spain1
08h	Japan
09h	Norway
0Ah	Denmark2
0Bh	Spain2
0Ch	Latin America
0Dh	Korea

7.1.15 ESC t n **(Character table type)**

Code: 1Bh 74h n

n: Character table type setting

Definable area: n = 00h, 01h, 02h, 03h, 04h, 05h, 10h, 11h, 12h, 13h

Default: n = 00h

Function: Select character table type.

n	Font code type
00h	PC437(USA - Euro std)
01h	Katakana - Japanese
02h	PC850 (Multilingual)
03h	PC860 (Portuguese)
04h	PC863 (Canadian-French)
05h	PC865 (Nordic)
10h	WPC1252
11h	PC866 (Cyrillic #2)
12h	PC852 (Latin 2)
13h	PC858

7.1.16 US MD1 **(Over-write mode)**

Code: 1Fh 01h

Function: Display mode set to Over-write mode.
Over-writes, or replaces existing data.
This command has effect for the current window.

7.1.17 US MD2 **(Vertical scroll mode)**

Code: 1Fh 02h

Function: Display mode set to Vertical scroll mode.
Scrolls cursor up 1 line.
This command has effect for the current window.

7.1.18 US MD3 **(Horizontal scroll mode)**

Code: 1Fh 03h

Function: Display mode set to Horizontal scroll mode.
Scrolls cursor horizontally 1 space.
This command has effect for the current window.

7.1.19 US s n **(Horizontal scroll speed)**

Code: 1Fh 73h n

n: Horizontal scroll speed setting

Definable area: 00h ≤ n ≤ 1Fh

Default: n = 00h

Function: Set speed for Horizontal scroll mode.
Scroll speed is set by “n”.
Subsequent commands are not processed until scroll is completed.

n	Speed
00h	Instantaneous (By Character)
01h	T ms / 2 dots
02h – 1Fh	(n - 1) × T ms / dot

Note
Scroll base time period “T” depends on screen mode and character size, etc.

7.1.20 US r n **(Reverse display)**

Code: 1Fh 72h n

n: Reverse display ON/OFF

Definable area: 00h ≤ n ≤ 01h

n = 00h: Reverse OFF

n = 01h: Reverse ON

Default: n = 00h

Function: Reverse display ON/OFF for character and image display.
Changing this setting only affects subsequent data. Content already displayed is not affected.

7.1.21 US w n **(Write mixture display mode)**

Code: 1Fh 77h n

n: Display write mode

Definable area: 00h ≤ n ≤ 03h

n = 00h: Normal display write (Not mixture display)

n = 01h: OR display write

n = 02h: AND display write

n = 03h: EX-OR display write

Default: n = 00h

Function: Specifies write mixture mode.
Newly-written characters and images are combined with current display contents in Display Memory.

7.1.22 US X n **(Brightness level setting)**

Code: 1Fh 58h n

n: Brightness level setting

Definable area: 01h ≤ n ≤ 08h

Default: n = 08h

Function: Set display brightness level.

n	Brightness level
01h	Approximately 12.5%
02h	Approximately 25.0%
03h	Approximately 37.5%
04h	Approximately 50.0%
05h	Approximately 62.5%
06h	Approximately 75.0%
07h	Approximately 87.5%
08h	100%

7.1.23 US (a n [parameter] (Display action command group)

Code: 1Fh 28h 61h n p1 … pn

n: Function No.

p1, …, pn: Parameter

Function: Execute processing of display action command.

The next command or data is not executed until display action processing is ended.

n	Function No.	Function
01h	Function 01h	Wait
10h	Function 10h	Scroll display action
11h	Function 11h	Blink display action
40h	Function 40h	Screen Saver

7.1.24 <Function 01h> US (a n t (Wait)

Code: 1Fh 28h 61h 01h t

t: Wait time

Definable area: 00h ≤ t ≤ FFh

Function: Waits for the specified time (command and data processing is stopped).

Wait time = t × approximately 0.5s

7.1.25 <Function 10h> US (a n wL wH cL cH s (Scroll display action)

Code: 1Fh 28h 61h 10h wL wH cL cH s

wL: Display screen shift byte count, lower byte

wH: Display screen shift byte count, upper byte

cL: Number of cycles, lower byte

cH: Number of cycles, upper byte

s: Scroll action speed

Definable area: 0000h ≤ (wL + wH × 100h) ≤ 03FFh

0001h ≤ (cL + cH × 100h) ≤ FFFFh

00h ≤ s ≤ FFh

Function: Shift the display screen.

Horizontal scrolling is possible by specifying as the shift byte count a multiple of (display screen "y" dot / 8). Display switching is possible by specifying shift byte count as (display screen "x" dot × display screen "y" dot / 8). Scroll speed is specified by "s".

Scroll speed: s × approximately 14ms / one shift

For example: 1 dot scroll to the left: wL = 02h, wH = 00h

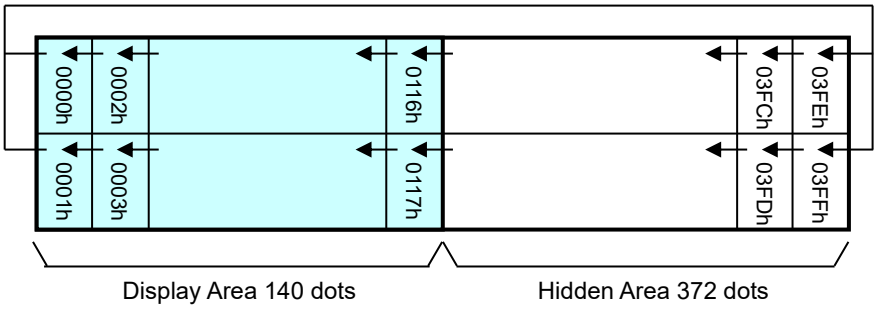

7.1.26 <Function 11h> US (a n p t1 t2 c (Display blink)

Code: 1Fh 28h 61h 11h p t1 t2 c

p: Blink pattern
t1: Normal display time
t2: Blank or Reverse display time
c: Number of cycles

Definable area: 00h ≤ p ≤ 02h

p = 00h: Normal display.
p = 01h: Blink display (alternately Normal and Blank display).
p = 02h: Blink display (alternately Normal and Reverse display).

01h ≤ t1 ≤ FFh
01h ≤ t2 ≤ FFh
01h ≤ c ≤ FFh

Function: Blink display action Blink pattern specified by “p”.
Time specified by “t1”, “t2”, and repeat count by “c”.

A: t1 × approximately 14ms (Normal display)
B: t2 × approximately 14ms (Blank or Reverse display)
C: Repeated “c” times.

Note

c = 00h: Blink continues during subsequent command and data processing, until c=01h-FFh is set, or Initialize command.
c = 01h – FFh: Blink display is repeated 1-255 times while command and data processing is stopped.
After display blinking is completed, Normal display returns and command and data processing resumes.
Command / data processing does not resume until operation is completed.

This command does not affect to display memory.

7.1.27 <Function 40h> US (a n p (Screen Saver)

Code: 1Fh 28h 61h 40h p

p: Screen Saver mode

Definable area: 00h ≤ p ≤ 04h

p = 00h: Display Power OFF (Power save mode)
p = 01h: Display Power ON
p = 02h: All dot OFF
p = 03h: All dot ON
p = 04h: Repeat blink display with Normal and Reverse display (Normal: 2s, Reverse: 2s)

Function: Control Power ON or OFF, and start Screen Saver mode.

p=00h – 01h: Control Power ON or OFF. This setting is applied until this command is re-specified.
p=02h – 04h: Start Screen Saver mode. This mode continues until next data input. Previous display is then restored.

7.1.28 US (f n [parameter] (Bit image display group)

Code: 1Fh 28h 66h n p1 … pn

n: Function No.
p1 ... pn: Parameter

Function: Execute processing of bit image data.

n	Function No.	Function
11h	Function 11h	Real-time bit image display

7.1.29 <Function 11h> US (f n xL xH yL yH g d(1)...d(k) (Real-time bit image display)

Code: 1Fh 28h 66h 11h xL xH yL yH g d(1)...d(k)

xL:	Bit image X size, lower byte (by 1 dot)
xH:	Bit image X size, upper byte (by 1 dot)
yL:	Bit image Y size, lower byte (by 8 dots)
yH:	Bit image Y size, upper byte (by 8 dots)
g:	Image = 01h (Fixed)
d(1) – d(k):	Image data (see below)

Definable area:
0001h ≤ (xL + xH × 100h) ≤ 0200h
0001h ≤ (yL + yH × 100h) ≤ 0002h
g = 01h
00h ≤ d ≤ FFH
k = x × y × g

Function: Display the bit image data inputted on the cursor position real-time.
Cursor position will not change.
If bit image exceeds the bounds of the current window, only the portion within the currently-selected window is displayed.
If Display position or display size etc., are outside the definable area, the command is cancelled at the point where the error is detected, and the remaining data is treated as standard data.

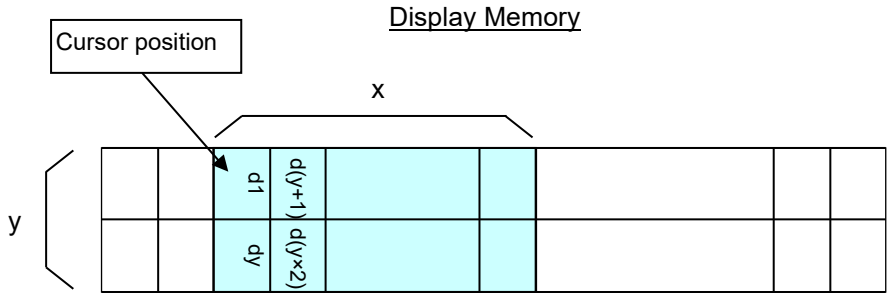

7.1.30 US (d n [parameter] (Dot unit command group)

Code: 1Fh 28h 64h n p1 … pn

n:	Function No.
p1, …, pn:	Parameter

Function: Dot unit display bit image data or character.

n	Function No.	Function
20h	Function 20h	Dot unit downloaded bit image display
21h	Function 21h	Dot unit real-time bit image display
30h	Function 30h	Dot unit character display

7.1.31 <Function 20h> US (d 20h xPL xPH yPL yPH m aL aH aE ySL ySH xOL xOH yOL yOH xL xH yL yH g (Dot unit downloaded bit image display)

Code: 1Fh 28h 64h 20h xPL xPH yPL yPH m aL aH aE ySL ySH xOL xOH yOL yOH xL xH yL yH g

xPL:	Display position x, lower byte (by 1 dot)
xPH:	Display position x, upper byte (by 1 dot)
yPL:	Display position y, lower byte (by 1 dot)
yPH:	Display position y, upper byte (by 1 dot)
m:	Image data Display Memory select
aL:	Bit image data definition address, lower byte
aH:	Bit image data definition address, upper byte
aE:	Bit image data definition address, extension byte
ySL:	Bit image defined, Y size, lower byte (by 8 dots)
ySH:	Bit image defined, Y size, upper byte (by 8 dots)
xOL:	Image data offset x, lower byte (by 1 dot)
xOH:	Image data offset x, upper byte (by 1 dot)
yOL:	Image data offset y, lower byte (by 1 dot)
yOH:	Image data offset y, upper byte (by 1 dot)
xL:	Bit image display X size, lower byte (by 1 dot)
xH:	Bit image display X size, upper byte (by 1 dot)
yL:	Bit image display Y size, lower byte (by 1 dot)
yH:	Bit image display Y size, upper byte (by 1 dot)
g:	Image information = 01h (fixed)

Definable area: 0000h ≤ (xPL + xPH × 100h) ≤ 01FFh
0000h ≤ (yPL + yPH × 100h) ≤ 000Fh
m = 02h

m = 02h:	Display Memory bit image

Display Memory bit image (m = 02h)

(aL + aH × 100h + aE × 10000h) = 000000h
(ySL + ySH × 100h) = 0000h
0000h ≤ (xOL + xOH × 100h) ≤ 01FFh
0000h ≤ (yOL + yOH × 100h) ≤ 000Fh
0001h ≤ (xL + xH × 100h) ≤ 0200h
0001h ≤ (yL + yH × 100h) ≤ 0010h
g = 01h

Function: Display the bit image defined in Display Memory at the specified (x, y) position.
Display position, display size, and image data offset are specified in unit of 1 dot.
If bit image exceeds the bounds of the current window, only the portion within the currently-selected window is displayed.
If Display position or image size, etc. are outside the definable area, the command is cancelled at the point where the error is detected, and the remaining data is treated as standard data.

7.1.32 <Function 21h> US (d 21h xPL xPH yPL yPH xL xH yL yH g d(1)...d(k) (Dot unit real-time bit image display)

Code: 1Fh 28h 64h 21h xPL xPH yPL yPH xL xH yL yH g d(1)...d(k)

xPL:	Display position x, lower byte (by 1 dot)
xPH:	Display position x, upper byte (by 1 dot)
yPL:	Display position y, lower byte (by 1 dot)
yPH:	Display position y, upper byte (by 1 dot)
xL:	Bit image display X size, lower byte (by 1 dot)
xH:	Bit image display X size, upper byte (by 1 dot)
yL:	Bit image display Y size, lower byte (by 1 dot)
yH:	Bit image display Y size, upper byte (by 1 dot)
g:	Display information = 1 (fixed)
d(1) – d(k):	Bit image data (see below)

Definable area:
0000h ≤ (xPL + xPH × 100h) ≤ 01FFh
0000h ≤ (yPL + yPH × 100h) ≤ 000Fh
0001h ≤ (xL + xH × 100h) ≤ 0200h
0001h ≤ (yL + yH × 100h) ≤ 0010h
g = 01h
00h ≤ d ≤ FFh

Function: Display the bit image data at the specified (x, y) position in real-time.
Display position and display size are specified in units of 1 dot.
If bit image exceeds the bounds of the current window, only the portion within the currently-selected window is displayed.
If Display position or display size are outside the definable area, the command is cancelled at the point where the error is detected, and the remaining data is treated as standard data.

Example: xP = 2, yP = 1, Display size x = 8, y = 14

Image data:

b7	d1	d3	d5	d7	d9	d11	d13	d15
b6								
b5								
b4								
b3								
b2								
b1								
b0								
b7	d2	d4	d6	d8	d10	d12	d14	d16
b6								
b5								
b4								
b3								
b2								
b1								
b0								

Display Memory:

							x=8						
				xP									
		0	1	2	3	4	5	6	7	8	9	10	11
	0												
yP	1			d1	d3	d5	d7	d9	d11	d13	d15		
	2												
	3												
	4												
	5												
	6												
	7												
y=14	8												
	9			d2	d4	d6	d8	d10	d12	d14	d16		
	10												
	11												
	12												
	13												
	14												
	15												

7.1.33 <Function 30h> US (d 30h xPL xPH yPL yPH m bLen d(1)...d(bLen) (Dot unit character display)

Code: 1Fh 28h 64h 30h xPL xPH yPL yPH m bLen d(1)...d(bLen)

xPL:	Display position x, lower byte (by 1 dot)
xPH:	Display position x, upper byte (by 1 dot)
yPL:	Display position y, lower byte (by 1 dot)
yPH:	Display position y, upper byte (by 1 dot)
m:	-
bLen:	Character data length
d(1) – d(bLen):	Character data / reverse select

Definable area:
0000h ≤ (xPL + xPH × 100h) ≤ 01FFh, FFFFh
0000h ≤ (yPL + yPH × 100h) ≤ 000Fh
m = 00h
00h ≤ bLen ≤ FFh
00h ≤ d ≤ FFh

d=10h:	Reverse OFF
d=11h:	Reverse ON

Function:
Display the specified text characters at the specified (x, y) position.
Display position is specified in units of 1 dot.
For display position (xPL + xPH × 100h) = FFFFh, write position continues from previous writes done using this command.
The current settings for character size and table type, etc. are used.
Font magnification setting is not used.
If character display exceeds the bounds of the current window, only the portion within the currently-selected window is displayed.
If Display position is outside the definable area, the command is cancelled at the point where the error is detected, and the remaining data is treated as standard data.

Example: Display position xP = 2, yP = 3, 6 × 8 dot character “AB”

Display Memory:

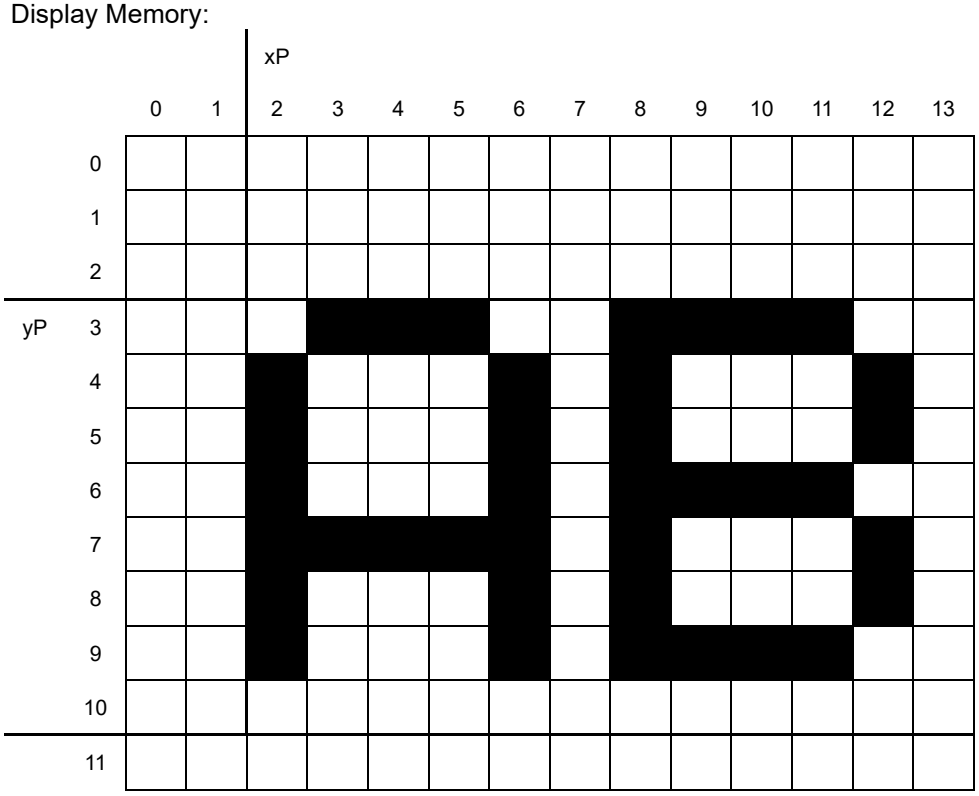

7.1.34 US (g n [parameter] (Font command group)

Code: 1Fh 28h 67h n p1 p2

n: Function No.

p1, p2: Parameter

Function: Font width and Font magnification settings.

n	Function No.	Function
03h	Function 03h	Font width
40h	Function 40h	Font magnification

7.1.35 <Function 03h> US (g n w (Font width)

Code: 1Fh 28h 67h 03h w

w: Font width setting

Definable area: 00h ≤ w ≤ 03h

w = 00h: Fixed character width 1 (1 dot space on right side)

w = 01h: Fixed character width 2 (1 dot space on each right and left side)

w = 02h: Proportional character width 1 (1 dot space in right side)

w = 03h: Proportional character width 2 (1 dot space in each right and left side)

Default: w = 01h

Function: Sets the font (character) width.

– Fixed character width 1 & 2
  Character is written with fixed character width. (6 or 7dot)

– Proportional character width
  Character is written with proportioned character width.

7.1.36 <Function 40h> US (g n x y (Font magnification)

Code: 1Fh 28h 67h 40h x y

x: X magnification factor

y: Y magnification factor

Definable area: 01h ≤ x ≤ 04h

01h ≤ y ≤ 02h

Default: x = 01h

y = 01h

Function: Set character magnification “x” times to the right and “y” times downward.
Character magnification includes the space specified by Font width command.

(x = 1, y = 1)

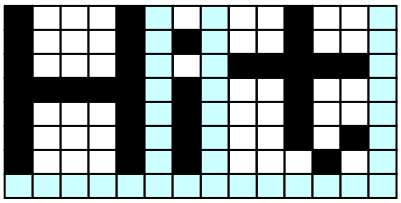

(x = 2, y = 2)

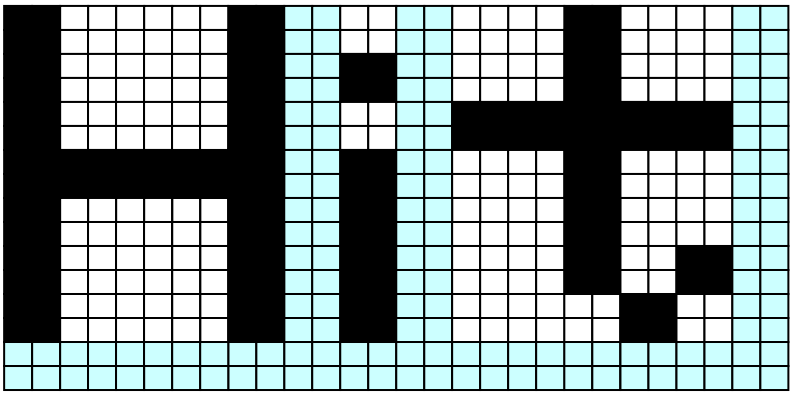

7.1.37 US (w n [parameter] (Window command group)

Code: 1Fh 28h 77h n p1 … pn

n: Function No.

p1… pn: Parameter

Function: Window / screen commands

n	Function No.	Function
01h	Function 01h	Current window select
02h	Function 02h	User-Window definition and cancel
10h	Function 10h	Write screen mode select

7.1.38 <Function 01h> US (w n a (Current window select)

Code: 1Fh 28h 77h 01h a

a: Current window number

Definable area: 00h ≤ a ≤ 04h

a = 00h: Base-Window

a = 01h – 04h: User-Window

Function: Select current window.
This command is ignored for User Windows with undefined window numbers.

7.1.39 <Function 02h> US (w n a b[xPL xPH yPL yPH xSL xSH ySL ySH] (User Window define / cancel)

Code: 1Fh 28h 77h 02h a b [xPL xPH yPL yPH xSL xSH ySL ySH]

a:	Definable window No. (No.1 – 4)
b:	Define or Cancel
xPL:	Left position of window lower byte (by 1dot)
xPH:	Left position of window upper byte (by 1dot)
yPL:	Top position of window lower byte (by 8dot)
yPH:	Top position of window upper byte (by 8dot)
xSL:	X size of window lower byte (by 1dot)
xSH:	X size of window upper byte (by 1dot)
ySL:	Y size of window lower byte (by 8dot)
ySH:	Y size of window upper byte (by 8dot)

Definable area:

01h ≤ a ≤ 04h

00h ≤ b ≤ 01h

b = 00h:	Cancel
b = 01h:	Define

0000h ≤ (xPL + xPH × 100h) ≤ 01FFh

0000h ≤ (yPL + yPH × 100h) ≤ 0001h

0001h ≤ (xSL + xSH × 100h) ≤ (0200h - (xPL + xPH × 100h))

0001h ≤ (ySL + ySH × 100h) ≤ (0002h - (yPL + yPH × 100h))

Function: Define or cancel User-Window

Display contents are not changed by this command.

– User-Window define (b = 01h):
  Specify User-Window number, window position, and window size. Window position and Window size are specified in units of one block (1 × 8 dot).
  Up to 4 User-Windows can be defined.
  The cursor position for the window is initialized to top left (X = 0, Y = 0).

– User-Window cancel (b = 00h):
  For User-Window cancel, window range parameters [xPL - ySH] are not used.
  If the currently-selected window is cancelled, the Base-Window becomes the currently-selected window.

If any of “a”, “b”, “xP”, “yP”, “xS”, or “yS” are outside the definable area, the command is cancelled at that point and the following data is treated as standard data.

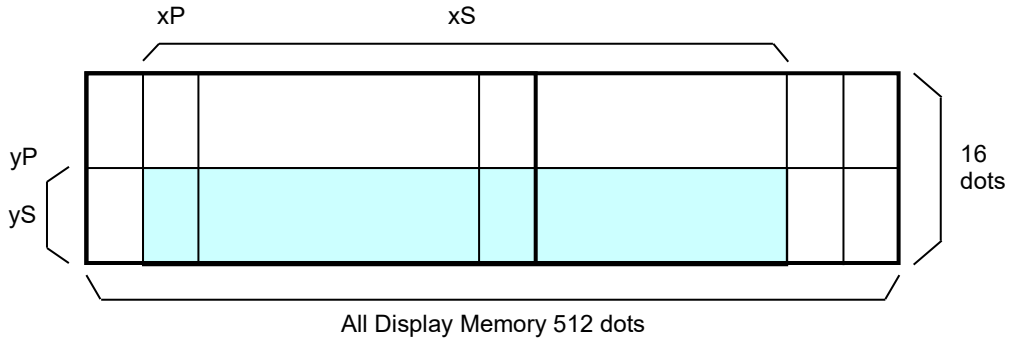

7.1.40 <Function 10h> US (w n a (Write screen mode select)

Code: 1Fh 28h 77h 10h a

a: Write screen mode

Definable area: 00h ≤ a ≤ 01h

a = 00h: Display screen mode

a = 01h: All screen mode

Default: a = 00h

Function: Select the Write screen mode. **This setting is only applicable for Base-Window.**

Display screen mode:
Display action is valid within area of either Display area or Hidden area, depending on cursor position.

All screen mode:
Display action is valid over the entire display memory.

For details, refer to "**6.4 Write screen mode**".

7.1.41 WINx (Window select shortcut)

Code: n

n: Window No. (WINx)

Definable area: 10h ≤ n ≤ 14h

Function: Select current window (1-byte command).
Refer to "**7.1.38 Current window select**" for more details.

WINx	Function
WIN0 (10h)	Select Base Window
WIN1 (11h)	Select User Window 1
WIN2 (12h)	Select User Window 2
WIN3 (13h)	Select User Window 3
WIN4 (14h)	Select User Window 4

7.2 Bit image data format

The Bit image consists of the data for image size (x × y) as follows;

Data	Pattern position
d (1)	P1
d (2)	P2
.	.
.	.
.	.
d (x × y)	P(x × y)

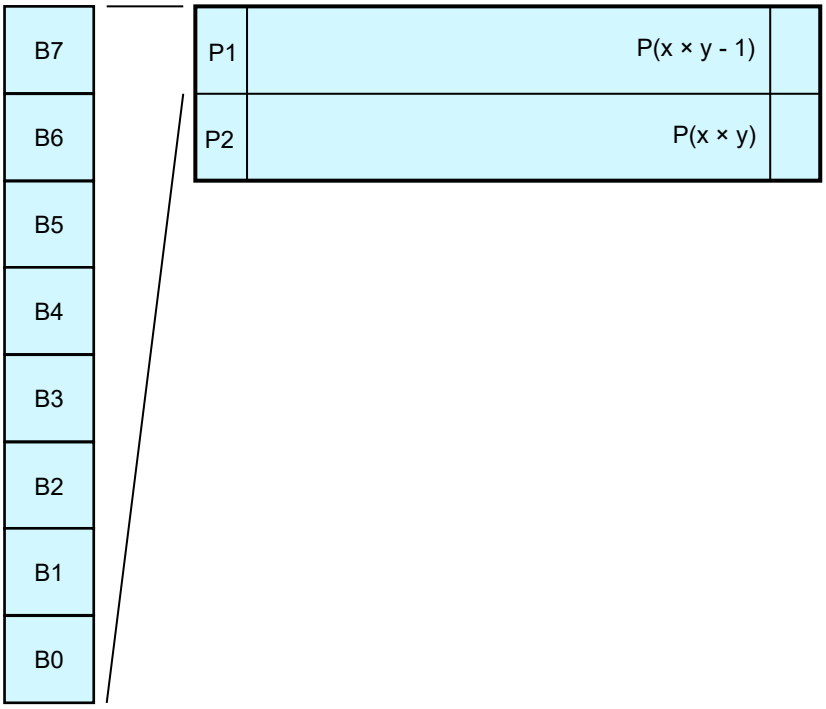

8 Setup

8.1 Jumper

No.	Function	Default
J0	Baud Rate select	OPEN
J1		OPEN
J2	Reserved (Do not change)	OPEN
JRB	Signal select of Pin#3 of 14 through-holes for Parallel I/F	OPEN

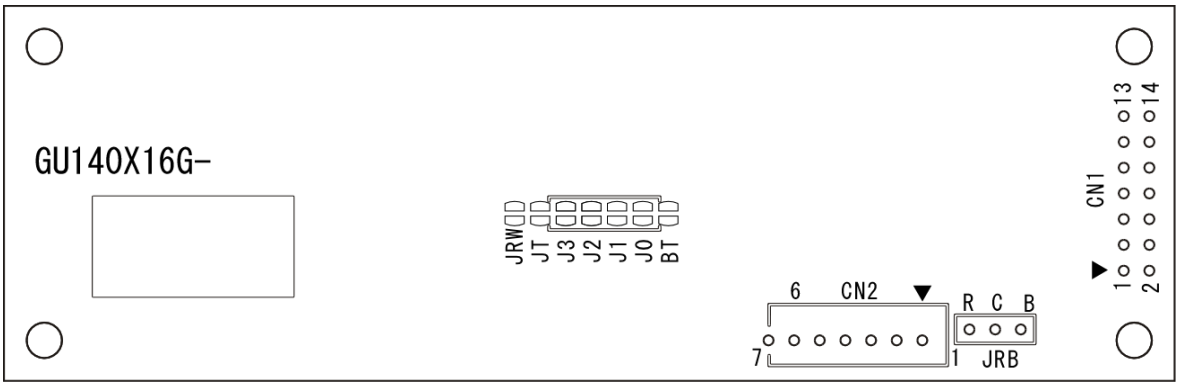

Solder side (back of VFD) view.
JRW, JT, J3, BT: Factory use only.
▲: pin 1 mark.

8.1.1 Baud rate select

J0	J1	Baud rate
OPEN	OPEN	38,400bps
SHORT	OPEN	19,200bps
OPEN	SHORT	9,600bps
SHORT	SHORT	115,200bps

8.1.2 Signal select of Pin#3 of 14 through-holes for Parallel I/F

JRB	Signal of Pin#3
OPEN	NC
C - R: SHORT	/RESET (Input)
C - B: SHORT	PBUSY (Output)
R - C - B: SHORT	Do not use.

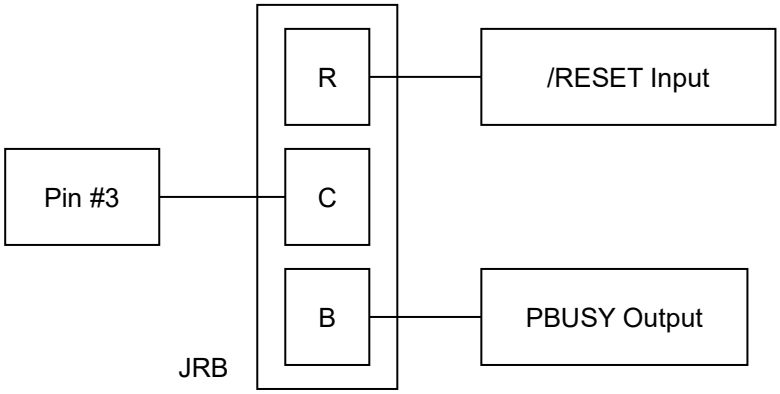

9 Connector

9.1 Parallel interface connecter (Through-holes) CN1

Pin No.	Signal name	Function	Direction
1	GND	Ground	Input
2	VCC	Power supply	Input
3	NC *1	Non connection	-
4	RS *2	Switch signal	Input
5	/WR	Data write	Input
6	/RD	Data read	Input
7	D0	Data input	Input
8	D1	Data input	Input
9	D2	Data input	Input
10	D3	Data input	Input
11	D4	Data input	Input
12	D5	Data input	Input
13	D6	Data input	Input
14	D7/ (PBUSY)	Data input/ (PBUSY)	Input/ (output)

*1 Pin #3 can be set to /RESET or PBUSY terminal, selectable by Jumper.
*2 Factory use only. Do not connect.
Refer to "**8.1 Jumper**".

9.2 Serial interface connector (Through-holes) CN2

9.2.1 Asynchronous serial interface

Pin No.	Signal name	Function	Direction
1	VCC	Power supply	Input
2	SIN	Data receive	Input
3	GND	Ground	Input
4	SBUSY	Display busy	Output
5	NC	No Connection	-
6	/RESET	Reset	Input
7	NC	No Connection	-

10 Firmware Version Notation

The firmware version is written in the following position.

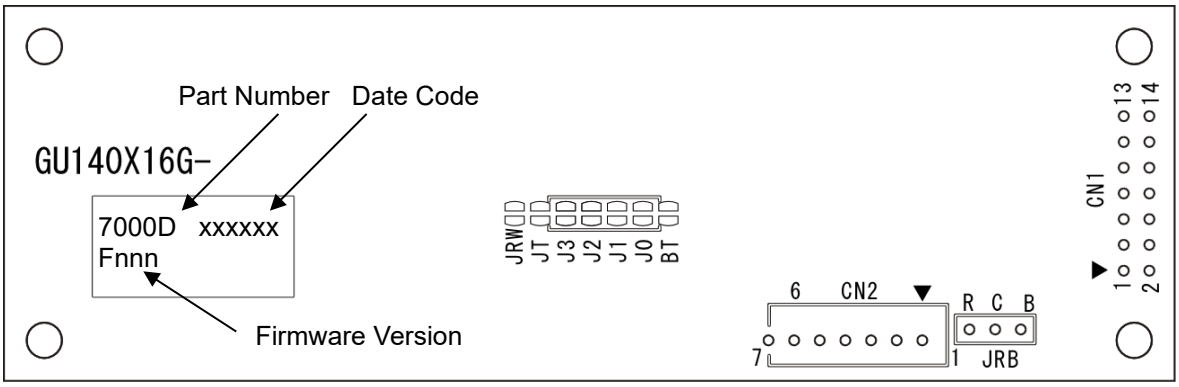

Solder side (back of VFD) view.

11 Outline Drawing

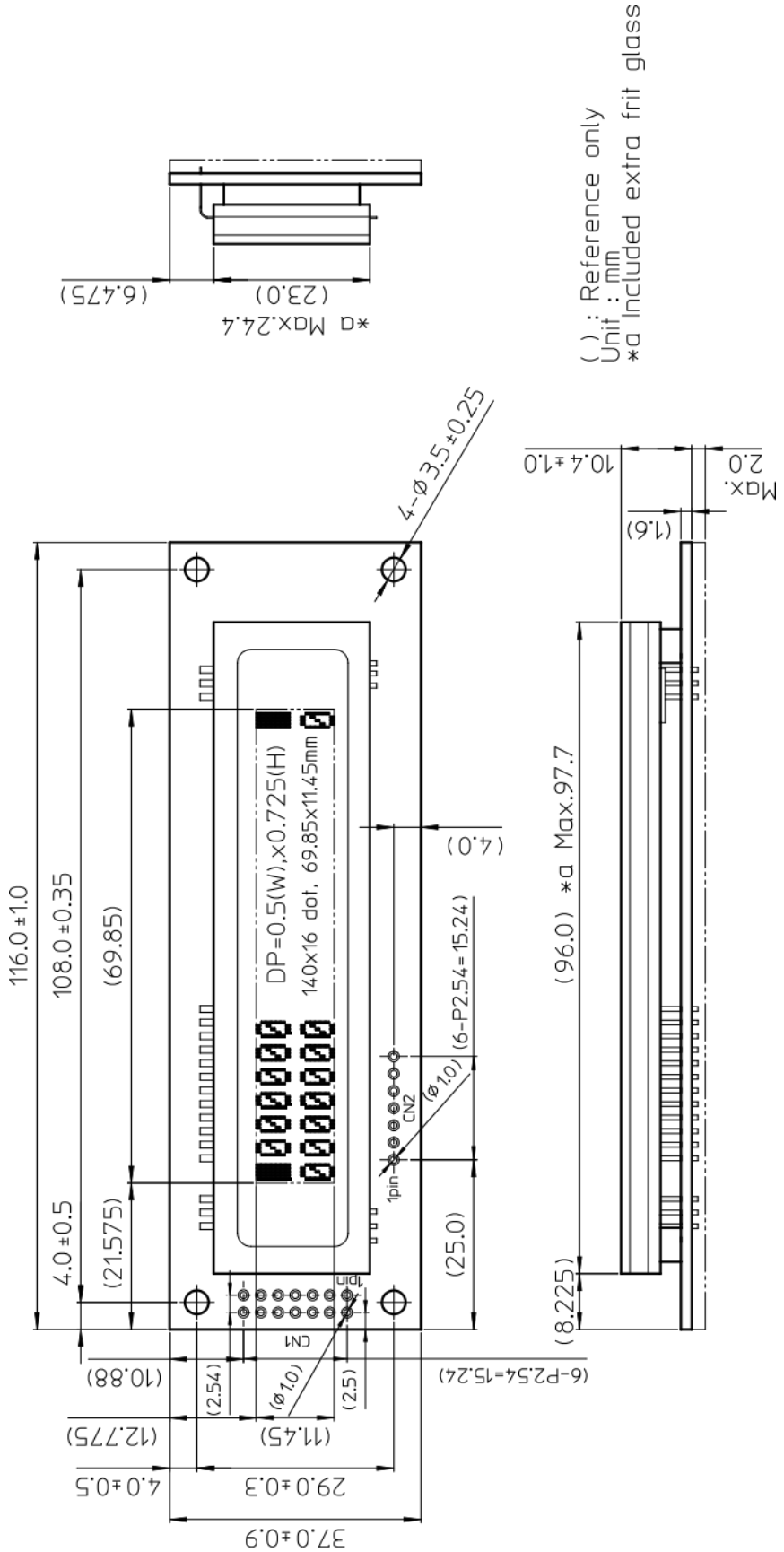

12 Revision Note

SPEC number	Date	Revision
DS-2145-0001-00	Sep. 13, 2023	Initial Issue