Rating	10A 250V AC c UL us	Mounting Hole	Cricuit Diagram
Insulation Resistance	DC 500V 100M ohm Min	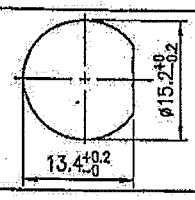	Nil
Dielectric Strength	AC 1500V 1 minute		
Fuse Size	Ø6.35*30 Ø6.35*31.8		

△1

Material:
Housing: Black,PF
Terminals: Nickel Plated Brass

1 HEX NUT ASSY
1 WASHER ASSY

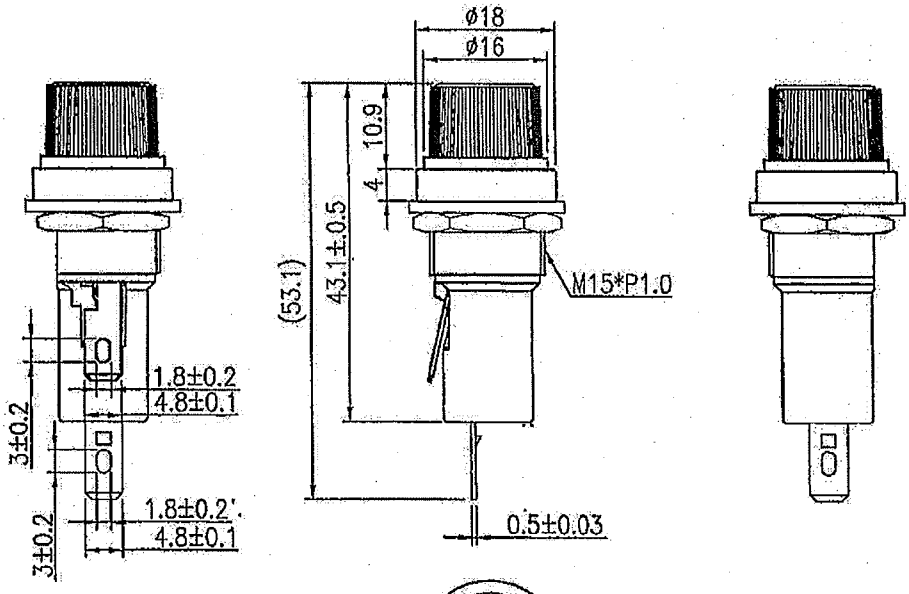

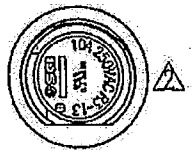

△2

Tolerances ±0.3 Unless Otherwise Specified

Date	Name	Description	No.
10/17/'16	柳新強	依品管通知，刪除CSA安規符號	△2
12/26/'13	柳新強	依品管及上級通知要求統一R3系列保險絲規格,保留原6.35*31.8mm,取消6.3*30mm,更改為6.35*30mm	△1

Drawn	Checked	Approved	SCI BOM No.	1310344	Model Name	FUSE HOLDER	
柳新強		研發部 2016.10.28. 李元生	Customer No.	112-R3-13-02-B	Model No.	R3-13	Rev.
10/17/'16			Unit	mm	Shin Chin Industrial Co., Ltd.		2