KA1458

Dual Operational Amplifier

Features

- Internal frequency compensation
- Short circuit protecion
- Large common mode and differential voltage range
- No latch up
- Low power consumption

Description

The KA1458 series are dual general purpose operational amplifiers, having short circuits protected and require no external components for frequency compensation. High common mode voltage range and absence of “latch up" make the KA1458 ideal for use as voltage followers. The high gain and wide range of operating voltage provides superior performance in integrator, summing amplifier and general feedback applications.

8-DIP

8-SOP

9-SIP

Internal Block Diagram

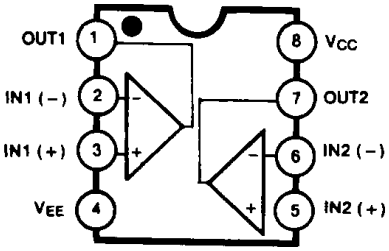

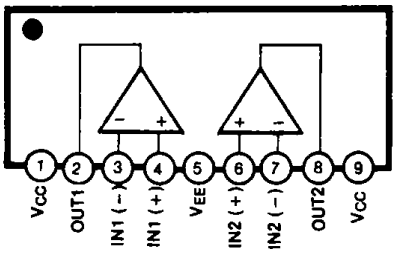

Rev. 1.0.1

©2001 Fairchild Semiconductor Corporation

Schematic Diagram

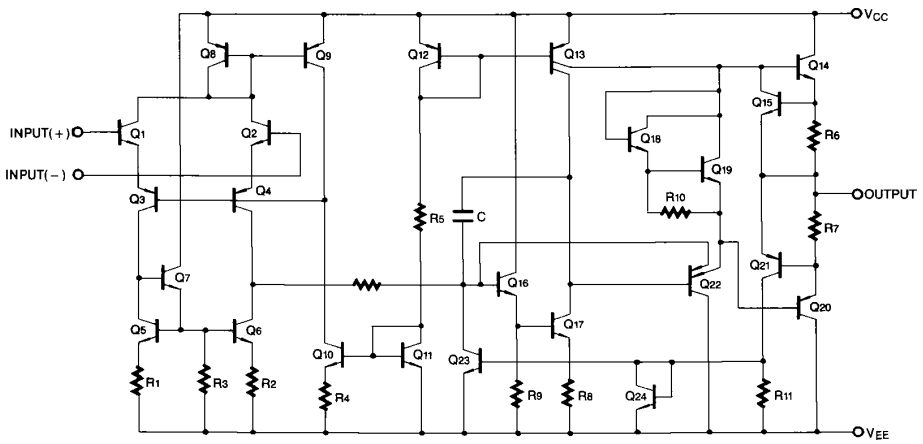

Absolute Maximum Ratings

Parameter	Symbol	Value	Unit
Power Supply Voltage	V_{CC}	±18	V
Input Differential Voltage	$V_{I(DIFF)}$	30	V
Input Voltage	V_I	±15	V
Operating Temperature Range KA1458	T_{OPR}	0 ~ + 70	°C
Storage Temperature Range	T_{STG}	- 65 ~ + 150	°C

Electrical Characteristics

(V_{CC} = + 15V, V_{EE} = - 15V, T_A = 25 °C unless otherwise specified)

Parameter	Symbol	Conditions	KA1458			Unit
			Min.	Typ.	Max.	
Input Offset Voltage	V_{IO}	R_S≤10KΩ	-	2.0	10	mV
Input Offset Current	I_{IO}	-	-	20	300	nA
Input Bias Current	I_{BIAS}	-	-	80	700	nA
Large Signal Voltage Gain	G_V	$V_{O(P-P)}$ = ± 10V, R_L≥2.0KΩ	20	200	-	V/mV
Input Voltage Range	$V_{I(R)}$	-	± 11	± 13	-	V
Input Resistance	R_I	-	0.3	1.0	-	MΩ
Common Mode Rejection Ratio	CMRR	-	60	90	-	dB
Power Supply Rejection Ratio	PSRR	-	77	90	-	dB
Supply Current (Both Amplifier)	I_{CC}	-	-	2.3	8.0	mA
Output Voltage Swing	$V_{O(PP)}$	R_S≤10KΩ	± 11	± 14	-	V
		R_S≤2KΩ	± 9	± 13	-	
Output Short Circuit Current	I_{SC}	-	-	20	-	mA
Power Consumption	P_C	V_O = 0V	-	70	240	mW
Transient Response (Unity Gain)						
Rise Time	T_R	V_I = 20mV,R_L≥2KΩ,C_L≤100pF	-	0.3	-	µs
Overshoot	OS	V_I = 20mV,R_L≥2KΩ,C_L≤100pF		15		%
Slew Rate	SR	V_I = 10V,R_L≥2KΩ,C_L≤100pF		0.5		V/µs

Electrical Characteristics

(V_{CC} = +15V, V_{EE} = -15V, Note1 unless otherwise specified)

Parameter	Symbol	Conditions	KA1458			Unit
			Min.	Typ.	Max.	
Input Offset Voltage	V_{IO}	R_S≤10KΩ	-	-	12	mV
Input Offset Current	I_{IO}	-	-	-	400	nA
Input Bias Current	I_{BIAS}	-	-	-	1000	nA
Large Signal Voltage Gain	G_V	$V_{O(P-P)}$= ± 10V, R_L≤2.0KΩ	15	-	-	V/mV
Common Mode Rejection Ratio	CMRR	R_S≥10KΩ	70	90	-	dB
Power Supply Rejection Ratio	PSRR	R_S≥10KΩ	77	90	-	dB
Output Voltage Swing	$V_{O(P.P)}$	R_L = 10KΩ	± 11	± 14	-	V
		R_L = 2KΩ	± 9	± 13	-	
Input Voltage Range	$V_{I(R)}$	-	± 12	-	-	V

Note:
1. KA1458 : 0°C ≤T_A≤70°C

Typical Performance Characteristics

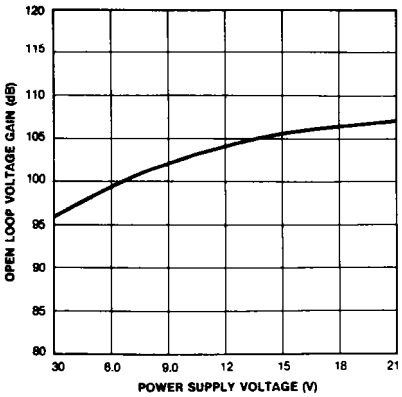

Figure 1. Open-Loop Voltage Gain vs Power Supply Voltages

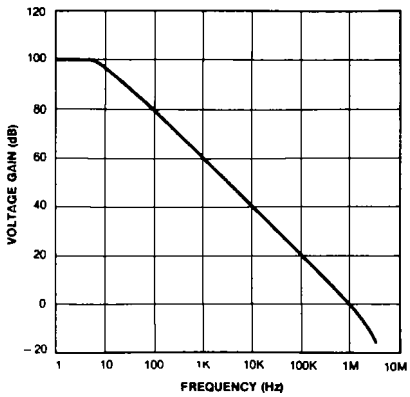

Figure 2. Open-Loop Frequency Response

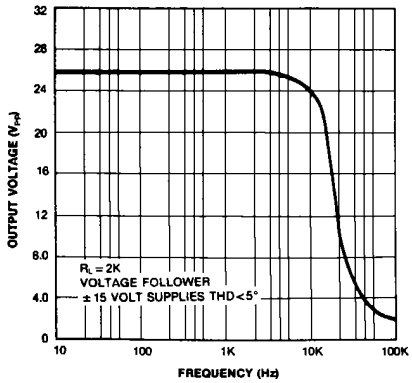

Figure 3. Power Bandwidth (Large Signal Output Swing vs Frequency)

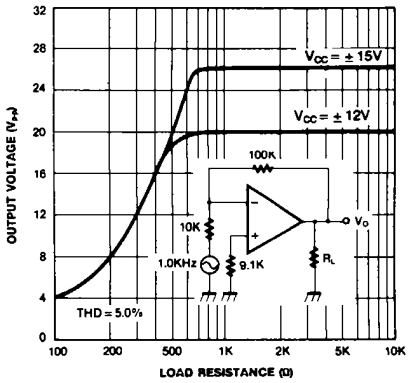

Figure 4. Output Voltage Swing vs Load Resistance

Mechanical Dimensions

Package

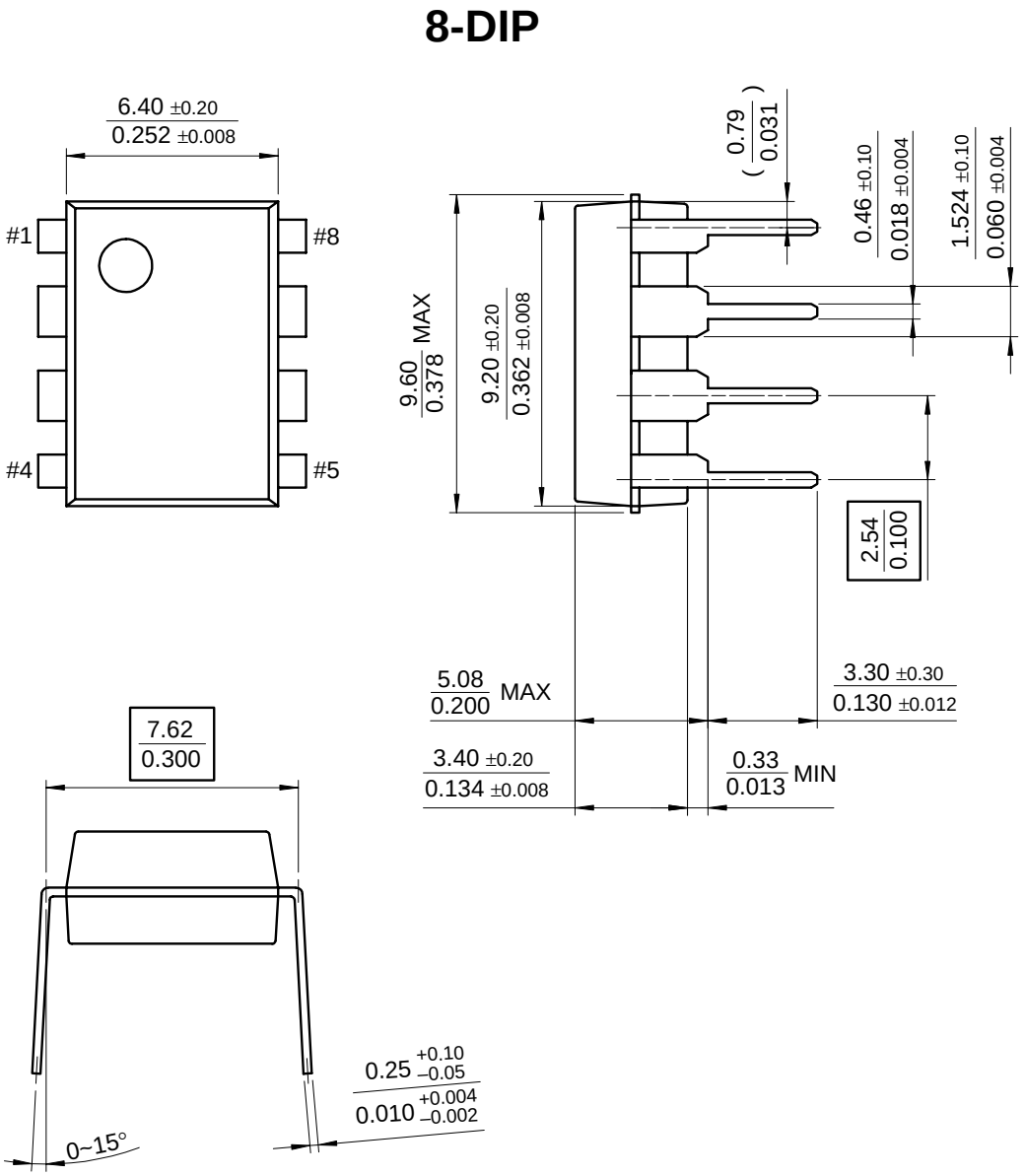

Mechanical Dimensions (Continued)

Package

8-SOP

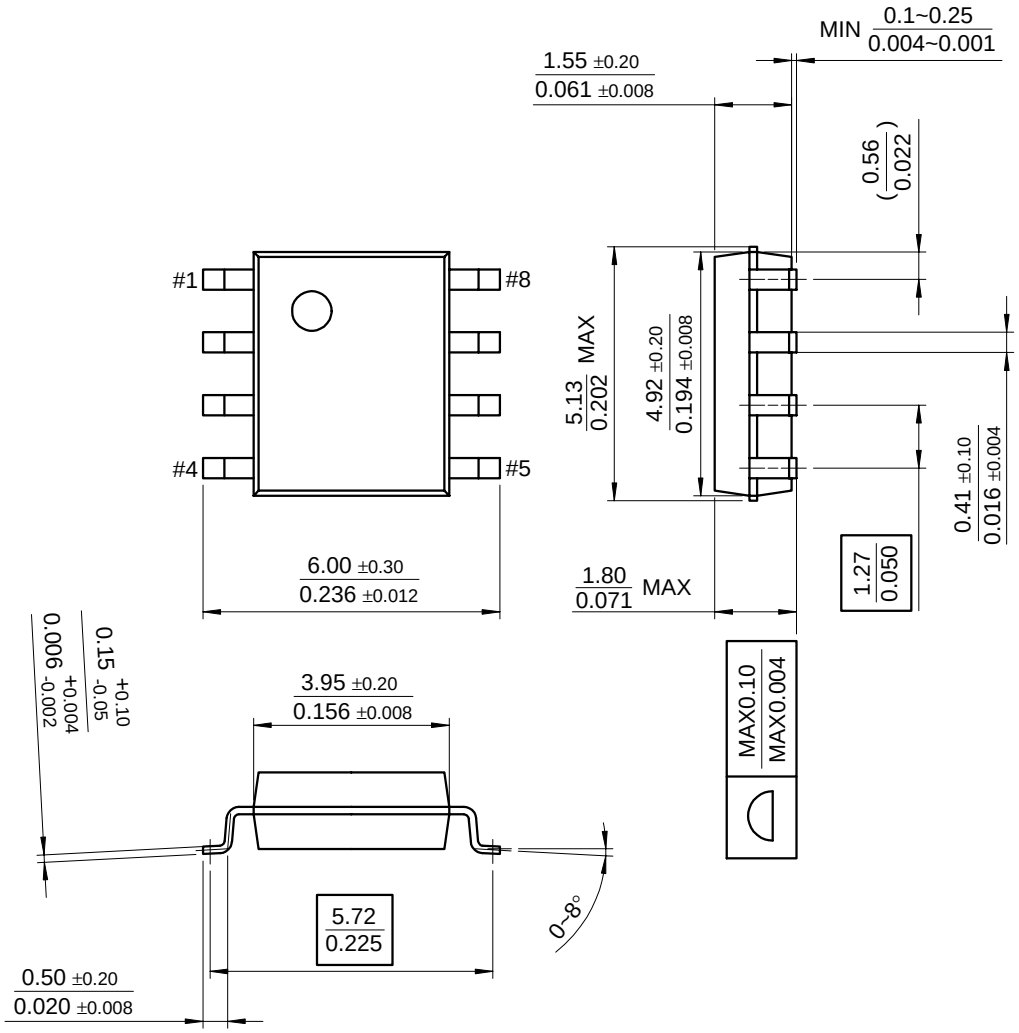

Mechanical Dimensions (Continued)

Package

9-SIP

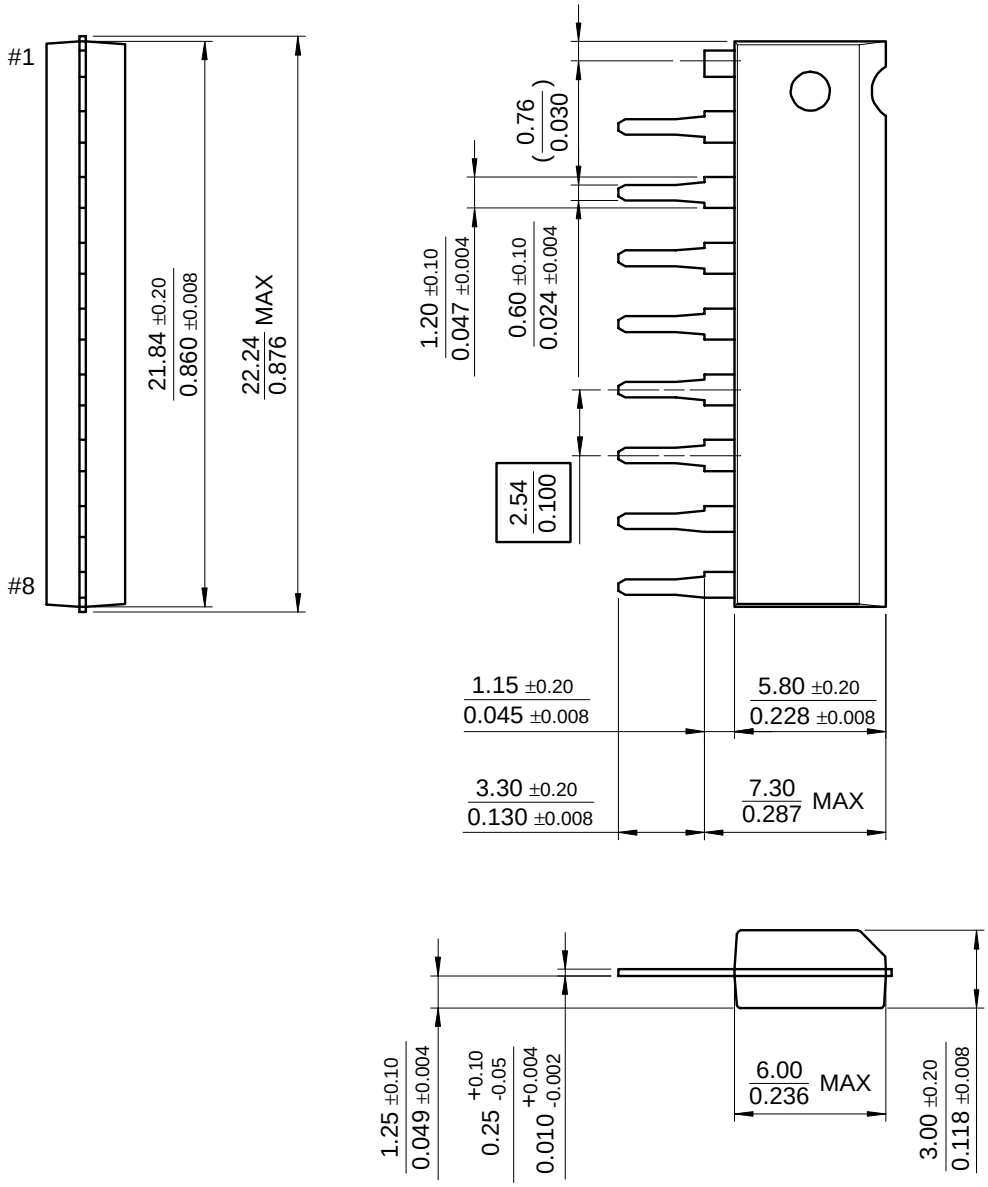

Ordering Information

Product Number	Package	Operating Temperature
KA1458	8-DIP	0 ~ + 70°C
KA1458D	8-SOP	
KA1458S	9-SIP	

DISCLAIMER

FAIRCHILD SEMICONDUCTOR RESERVES THE RIGHT TO MAKE CHANGES WITHOUT FURTHER NOTICE TO ANY PRODUCTS HEREIN TO IMPROVE RELIABILITY, FUNCTION OR DESIGN. FAIRCHILD DOES NOT ASSUME ANY LIABILITY ARISING OUT OF THE APPLICATION OR USE OF ANY PRODUCT OR CIRCUIT DESCRIBED HEREIN; NEITHER DOES IT CONVEY ANY LICENSE UNDER ITS PATENT RIGHTS, NOR THE RIGHTS OF OTHERS.

LIFE SUPPORT POLICY

FAIRCHILD'S PRODUCTS ARE NOT AUTHORIZED FOR USE AS CRITICAL COMPONENTS IN LIFE SUPPORT DEVICES OR SYSTEMS WITHOUT THE EXPRESS WRITTEN APPROVAL OF THE PRESIDENT OF FAIRCHILD SEMICONDUCTOR CORPORATION. As used herein:

1. Life support devices or systems are devices or systems which, (a) are intended for surgical implant into the body, or (b) support or sustain life, and (c) whose failure to perform when properly used in accordance with instructions for use provided in the labeling, can be reasonably expected to result in a significant injury of the user.
2. A critical component in any component of a life support device or system whose failure to perform can be reasonably expected to cause the failure of the life support device or system, or to affect its safety or effectiveness.

6/1/01 0.0m 001
Stock#DSxxxxxxxx
© 2001 Fairchild Semiconductor Corporation

This datasheet has been download from:

www.datasheetcatalog.com

Datasheets for electronics components.