THIS DRAWING IS UNPUBLISHED. RELEASED FOR PUBLICATION 2014
© COPYRIGHT 2014 BY - TE CONNECTIVITY ALL RIGHTS RESERVED.

LOC	DIST
ES	00

REVISIONS

P	LTR	DESCRIPTION	DATE	DWN	APVD
	A	REVISED PER ECR-18-006153	23APR2018	RS	AZ
	A1	REVISED PER ECR-18-018565	30OCT2018	SR	MZ

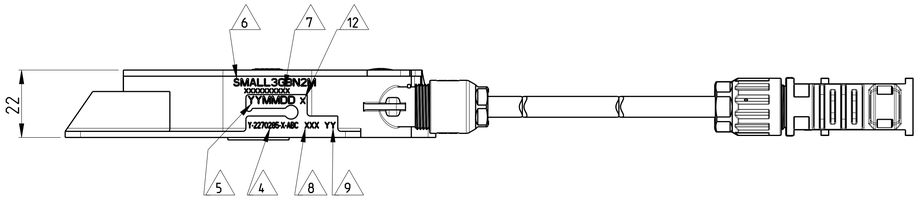

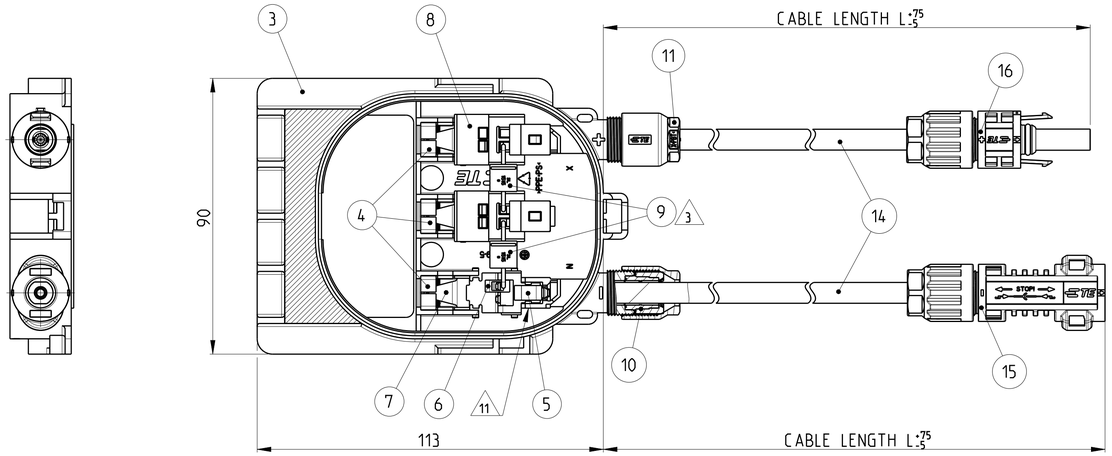

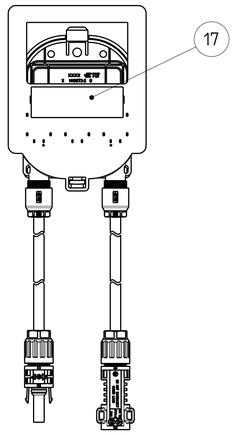

1:2

1- -1 AS SHOWN

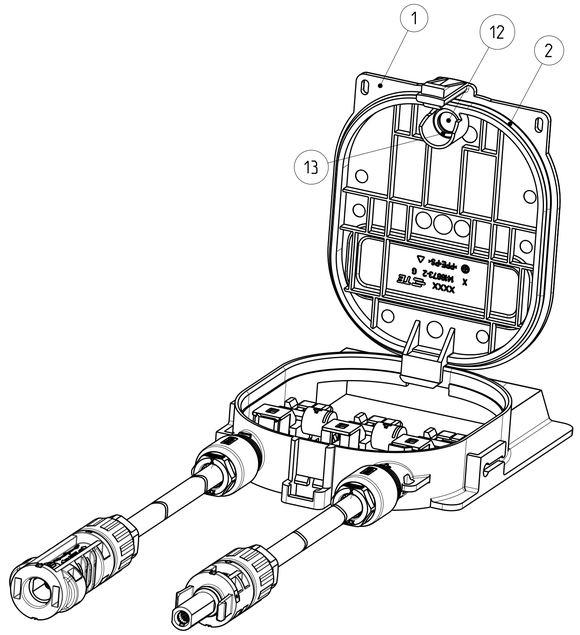

VIEW WITH ASSEMBLED COVER OPEN FOR REFERENCE

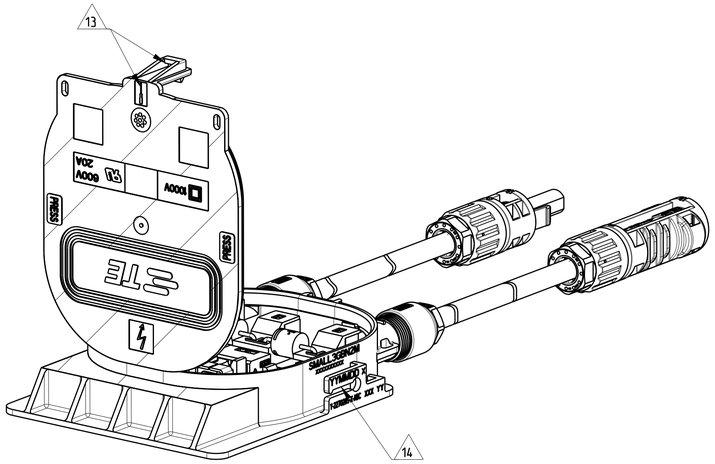

VIEW WITH ASSEMBLED COVER

1. SOLAR MODULE BOX COVER ASSY SHOWN ASSEMBLED.
   SOLAR MODULE BOX COVER ASSY ENCLOSE LOOSELY.
2. PACKAGING UNIT: 40 PIECES
   STANDARD PACKAGING QUANTITY: 40 PIECES
3. DIODE ACCORDING TO SPECIFICATION 108-94244
4. PART NUMBER WITH SUFFIX NUMBER FOR UL MODEL APPROVAL.WHERE "ABC" IS PLACEHOLDER.
5. PRODUCTION DATE (YYMMDD)
6. MODEL CODE ACCORDING TE-SPEC. 404-74000-1
7. CONSECUTIVE SERIAL NUMBER
8. MANUFACTURING LOCATION CODE.
9. TEST EQUIPMENT NUMBER
10. ISCmax= 14.0A ACC. IEC62790:2014,5.3.18
11. SHROUDING COVER ITEM 8 NOT SHOWN
12. MARK FOR DIODE TYPE:
    B FOR DIODE SL1515B.
15. SOLAR CABLE WITH UL4703 AND EN50618 APPROVAL,4mm² / 12AWG,PN2270260-1,2270245-1,2270259-1,2270215-1 CAN BE ALTERNATIVELY USED.
16. PACKAGING UNIT: 30 PIECES
    STANDARD PACKAGING QUANTITY: 30 PIECES

MOUNTING INSTRUCTION FOR COVER, ASSY:

1. MOUNT COVER, ASSY ITEM NO. 1 AND 2 INTO THE LOWER PART ITEM NO. 3 AND CLOSE IT. (LATCH SNAP IN).
2. RE-OPEN: PUT IN MARKED OPENING 13 SCREWDRIVER 3mm AND MOVE LATCH} UNTIL LOCKING LATCH FREE THE COVER, ASSY.

   OPEN COVER, ASSY ITEM NO. 1 AND 2 AND PUT IN LATERAL RETAINING SLOT 14

2	16	2	2				
SMALL3GBN2M				MODEL CODE			
1000	2000	1200	1000	CABLE LENGTH L(MM)			
1-2270285-1	2270285-4	2270285-2	2270285-1	ORDER PART NUMBER			
1	-	-	-	17	DOUBLE SIDED TAPE	-	
1	1	1	1	16	PV4-S SOCKET CONNECTOR ASSY. PLUS CODE	-	-
1	1	1	1	15	PV4-S PIN CONNECTOR ASSY. MINUS CODE	-	-
AR	AR	AR	AR	14	SOLAR CABLE 4mm² / 12AWG 15	BLACK	-
1	1	1	1	13	RING FOR ULTRASONIC WELDING	BEIGE	-
1	1	1	1	12	MEMBRANE VENTS	BLACK	-
2	2	2	2	11	CABLE SCREW JOINT	BLACK	PBT
2	2	2	2	10	PINCH RING SEAL INMOLD. ASSY	BLACK	PA66/LSR
2	2	2	2	9	BYPASS DIODE TYPE: SL1515B 3	-	-
3	3	3	3	8	SHROUDING COVER	BLACK	PET
3	3	3	3	7	FOIL SPRING	PLAIN	STAINLESS STEEL
4	4	4	4	6	TE SPRING CLAMP WITH ANTI OVERSTRESS	PLAIN	STAINLESS STEEL
2	2	2	2	5	TE SPRING CLAMP WITH ANTI OVERSTRESS	PLAIN	STAINLESS STEEL
3	3	3	3	4	CONTACT RAIL	TIN HOT DIPPED	CuZn
1	1	1	1	3	SOLAR MODULE BOX, LOWER PART	-	-
1	1	1	1	2	O-RING 1	RED	SILICONE
1	1	1	1	1	SOLAR MODULE BOX COVER, ASSY 1	BLACK	PPE+PS
QTY PER ASSY				ITEM NO.	DESCRIPTION	SURFACE / COLOUR	MATERIAL

THIS DRAWING IS A CONTROLLED DOCUMENT.

DIMENSIONS: mm

TOLERANCES UNLESS OTHERWISE SPECIFIED:
0 PLC ±
1 PLC ±.1
2 PLC ±.01
3 PLC ±.005
4 PLC ±.0005
ANGLES ±

MATERIAL - -

FINISH - -

DWN	ALEX ZHANG	28FEB2018
CHK	ALEX ZHANG	28FEB2018
APVD	OLAF LEIJNSE	28FEB2018
PRODUCT SPEC	108-18955	
APPLICATION SPEC	114-18488-1	
WEIGHT	-	

TE Connectivity

NAME: ASSY,SMALL J/B, SMALL3GBN2M,PV4-S - -

SIZE	CAGE CODE	DRAWING NO	RESTRICTED TO
A1	00779	C-2270285	-

CUSTOMER DRAWING SCALE 1:1 SHEET 1 OF 1 REV A1

4805 (3/11)