ITEM	CODE	PART-NO.:	
A	2	15498535	
L	2	13670757	⑤
AJ	2	33116047	⑳
AN	2	33127627	㉒㉓
AV	2	33235477	㉖
BL	2	35121934	㉗
BZ	2	~~35719540~~	㉙

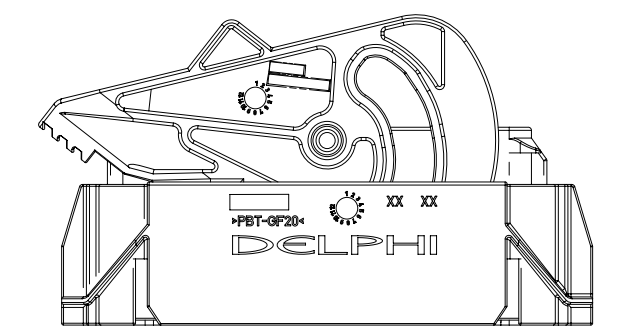

ITEM	CODE	PART-NO.:	
BQ	3	35206547	㉗
BP	2	35206546	㉗

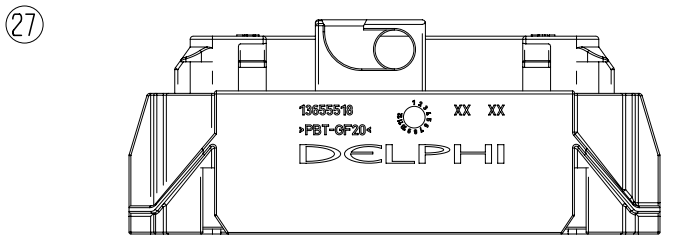

ITEM	CODE	PART-NO.:	
J	2	13655518	④
K	2	13662622	③
M	2	13670755	⑤
N	2	13670756	⑤
P	2	13775593	⑥
Q	2	13840103	⑦
R	2	13853124	⑧
X	2	13895980	⑪
AA	2	13957056	⑭
AB	2	13980832	⑮
AC	2	13980834	⑮
AE	2	13964768	⑰
AG	2	15533085	⑱
AL	2	33104301	㉑
AP	2	33148264	㉓
AQ	2	33185037	㉓
AR	2	33236153	㉔
AS	2	33235465	㉖㉗
AZ	2	35040250	㉖
BF	2	35037374	㉖

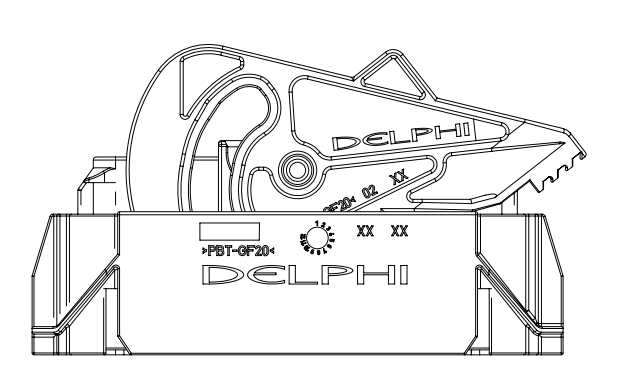

ITEM	CODE	PART-NO.:	
BO	1	35202510	㉗

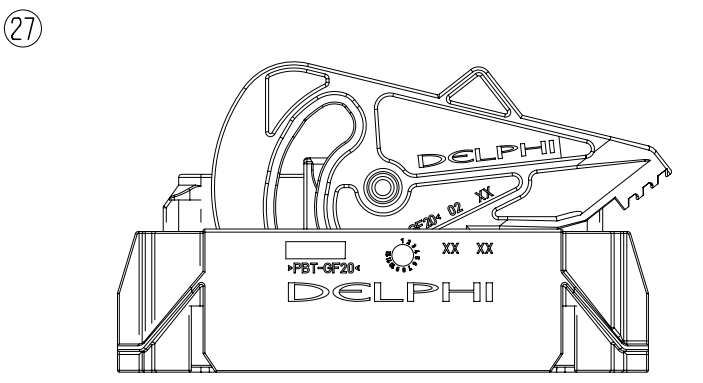

ITEM	CODE	PART-NO.:	
B	0	13579681	②
D	0	13609815	②
F	0	13609817	③
H	0	13657649	④
W	0	~~15498533~~	⑩
AD	0	~~15509883~~	⑯㉓
BB	0	33212818	㉖
BC	0	33294436	㉖
BE	0	33343719	㉖
BR	0	35264860	㉗

CB	0	36039784	㉚
BX	0	35710510	㉙

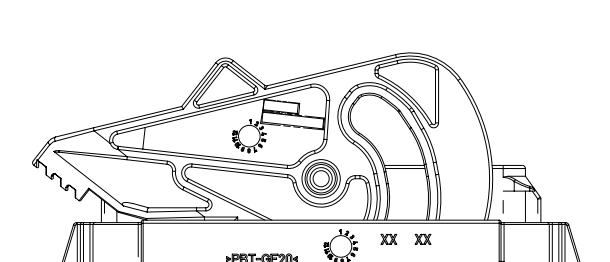

ITEM	CODE	PART-NO.:	
C	0	13580662	②
E	0	13609820	③
G	0	13609821	③
I	0	13657650	④
T	0	13859056	⑨
Z	0	13896194	⑬
AI	0	~~15536550~~	⑲㉓
AY	0	35040232	㉖
BA	0	33212819	㉖
BD	0	33333067	㉖
BG	0	35086898	㉖
BH	0	35087016	㉖
BI	0	35087045	㉖
BJ	0	35087044	㉖
BK	0	35142685	㉖
BS	0	35290581	㉘
BT	0	35183111	㉙
BW	0	35500579	㉙

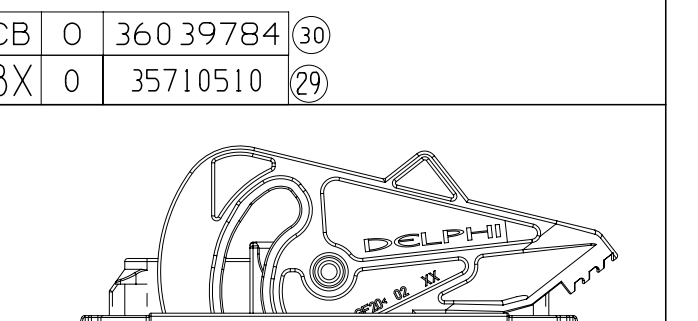

ITEM	CODE	PART-NO.:	
U	1	15498534	⑩
AH	1	15533088	⑱
AM	1	15538439	㉒㉓
AW	1	33235479	㉕
BM	1	35202508	㉗
BV	1	35447397	㉙
CA	1	35818262	㉙

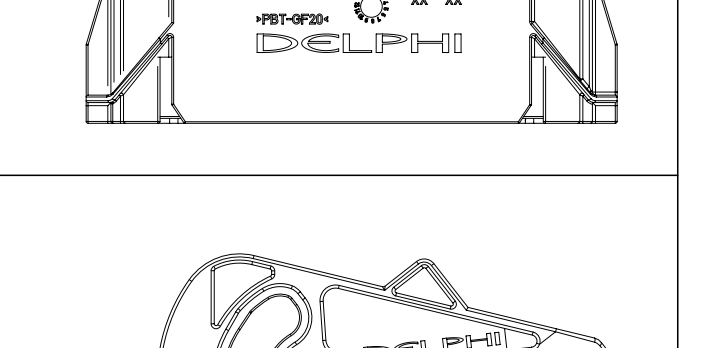

ITEM	CODE	PART-NO.:	
Y	1	13924619	⑫
AF	1	13962189	⑰
AX	1	33235480	㉕
BN	1	35202509	㉗
BU	1	35322917	㉙
BY	1	35709806	㉙

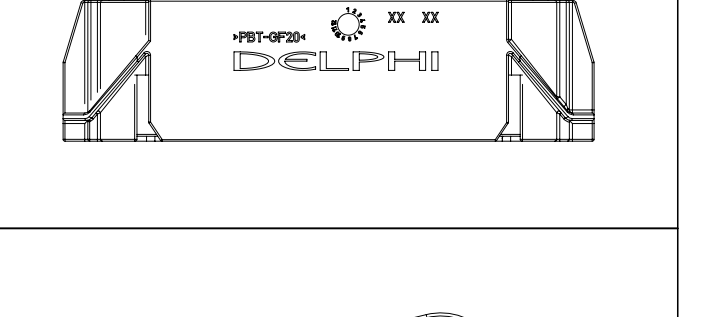

ITEM	CODE	PART-NO.:	
V	3	15498536	⑩
AU	3	33235472	㉕

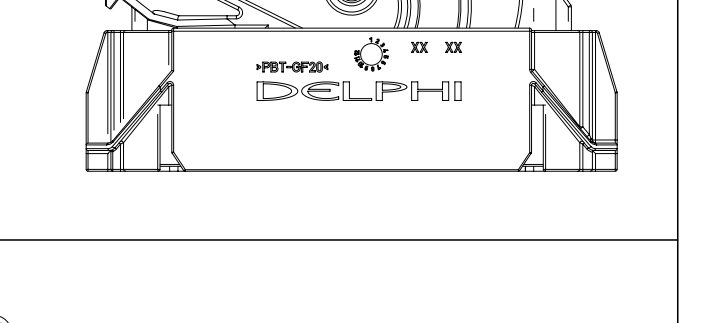

ITEM	CODE	PART-NO.:	
AK	3	33110415	㉑㉓
AT	3	33235466	㉕

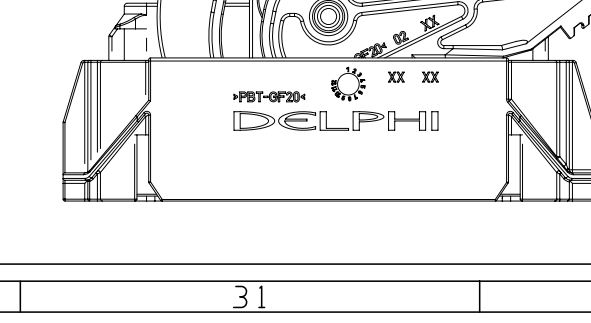

	ITEM	PART NO	STG	REV	N/P	REV DATE	CODE	CONNECTOR	LEVER	TPA	MODULE	SEAL
㉚	CB	36039784	U	01	-	11OC25	0	36039783	13579677	15432291	15432293	15432286
㉙	CA	35818262	R	01	-	25SE23	1	35710514	33230483	15432291	15432296	15432286
㉙	BZ	~~35719540~~	R	01	-	12OC22	2	35719541	15498540	15432291	15432295	15432286
㉙	BY	35709806	R	01	-	12OC22	1	35710514	33230483	15432291	15432296	15432286
㉙	BX	35710510	R	01	-	12OC22	0	35710512	13579677	15432291	15432293	15432286
㉙	BW	35500579	R	01	-	27SE20	0	35264842	13579677	15432291	15432293	15432286
㉙	BV	35447397	R	01	-	20FE20	1	13962191	15498540	15432291	15432296	15432286
㉙	BU	35322917	R	01	-	25AP19	1	35322916	15498540	15432291	15432296	15432286
㉙	BT	35183111	R	01	-	12FE19	0	35183110	13579677	15432291	15432293	15432286
㉘	BS	35290581	R	01	-	14DE18	0	35294401	15498540	15432291	15432293	15432286
㉗	BR	35264860	R	01	-	10OC18	0	35264842	13579677	15432291	15432293	15432286
㉗	BQ	~~35206547~~	R	01	-	23MA18	3	15498532	NA	15432291	15432294	15432286
㉗	BP	~~35206546~~	R	01	-	23MA18	2	33240635	NA	15432291	15432295	15432286
㉗	BO	35202510	R	01	-	23MA18	1	35202506	15498540	15432291	15432296	15432286
㉗	BN	35202509	R	01	-	23MA18	1	35202505	15498540	15432291	15432296	15432286
㉗	BM	35202508	R	01	-	23MA18	1	35202505	15498540	15432291	15432296	15432286
㉗	BL	~~35121934~~	R	01	-	23MA18	2	35191319	NA	15432291	15432295	15432286
㉖	BK	35142685	R	01	-	26MA17	0	35142684	15498540	15432291	15432293	15432286
㉖	BJ	35087044	R	01	-	26MA17	0	35087015	15498540	15432291	15432293	15432286
㉖	BI	35087045	R	01	-	26MA17	0	35086978	15498540	15432291	15432293	15432286
㉖	BH	35087016	R	01	-	26MA17	0	35086693	15498540	15432291	15432293	15432286
㉖	BG	35086898	R	01	-	26MA17	0	35086691	15498540	15432291	15432293	15432286
㉖	BF	35037374	R	01	-	26MA17	2	35037373	15498540	15432291	15432295	15432286
㉖	BE	33343719	R	01	-	26MA17	0	33332815	13579677	15432291	15432293	15432286
㉖	BD	33333067	R	01	-	26MA17	0	33332815	15498540	15432291	15432293	15432286
㉖	BC	33294436	R	01	-	26MA17	0	33329573	13579677	15432291	15432293	15432286
㉖	BB	33212818	R	01	-	26MA17	0	33212816	13579677	15432291	15432293	15432286
㉖	BA	33212819	R	01	-	26MA17	0	33212816	15498540	15432291	15432293	15432286
㉖	AZ	35040250	R	01	-	26MA17	2	35040239	15498540	15432291	15432295	15432286
㉖	AY	35040232	R	01	-	26MA17	0	35040238	15498540	15432291	15432293	15432286
㉕	AX	33235480	R	01	-	15OC15	1	15498530	33230483	15432291	15432296	15432286
㉕	AW	33235479	R	01	-	15OC15	1	15498530	33230483	15432291	15432296	15432286
㉗㉖	AV	33235477	R	02	-	15OC15	2	33240635	33230483	15432291	15432295	15432286
㉕	AU	33235472	R	01	-	15OC15	3	15498532	33230483	15432291	15432294	15432286
㉕	AT	33235466	R	01	-	15OC15	3	15498532	33230483	15432291	15432294	15432286
㉗㉖	AS	33235465	R	02	-	15OC15	2	33240635	33230483	15432291	15432295	15432286
㉔	AR	33236153	R	01	-	15JN15	2	33236154	15498540	15432291	15432295	15432286
㉓	AQ	33185037	R	01	-	02SE14	2	33185035	15498540	15432291	15432295	15432286
㉓	AP	33148264	R	01	-	02SE14	2	33148263	15498540	15432291	15432295	15432286
㉓㉒	AN	~~33127627~~	R	01	-	15MY14	2	33118037	15498540	15432291	15432295	15432286
㉔㉓㉒	AM	15538439	R	01	-	15MY14	1	15538440	15498540	15432291	15432296	15432286
㉑	AL	33104301	R	01	-	17FE14	0	33104288	15498540	15432291	15432293	15432286
㉑	AK	33110415	R	01	-	17FE14	3	15498532	15498540	15432291	15432294	15432286
⑳	AJ	33116047	R	01	-	26OC13	2	33116048	15498540	15432291	15432295	15432286
㉒⑲	AI	~~15536550~~	R	01	-	30AP13	0	15536551	15498540	15432291	15432293	15432286
⑱	AH	15533088	R	01	-	17AP13	1	15533089	15498540	15432291	15432296	15432286
⑱	AG	15533085	R	01	-	17AP13	2	15533086	15498540	15432291	15432295	15432286
⑰	AF	13962189	R	01	-	28MR13	1	13962191	15498540	15432291	15432296	15432286
⑰	AE	13964768	R	01	-	28MR13	2	15502896	15498540	15432291	15432295	15432286
㉒⑯	AD	~~15509883~~	R	01	-	19NO12	0	15509884	13579677	15432291	15432293	15432286
⑯⑮	AC	13980834	R	01	-	27SE12	2	13980835	15498540	15432291	15432295	15432286
⑮	AB	13980832	R	01	-	27SE12	2	13980833	15498540	15432291	15432295	15432286
⑭	AA	13957056	R	01	-	23AU12	2	13957055	15498540	15432291	15432295	15432286
⑬M⑬	Z	13896194	R	02	-	16DE11	0	13896192	15498540	15432291	15432293	15432286
⑫	Y	13924619	R	01	-	01NO11	1	15498530	15498540	15432291	15432296	15432286
⑪	X	13895980	R	01	-	22JL11	2	13895979	15498540	15432291	15432295	15432286
⑩	W	~~15498533~~	R	01	-	15JL11	0	15498529	15498540	15432291	15432293	15432286
⑩	V	15498536	R	01	-	15JL11	3	15498532	15498540	15432291	15432294	15432286
⑩	U	15498534	R	01	-	15JL11	1	15498530	15498540	15432291	15432296	15432286
⑨	T	13859056	R	01	-	15FE11	0	13859055	15498540	15432291	15432293	15432286
⑧	R	13853124	R	01	-	10AU10	2	13853123	15498540	15432291	15432295	15432286
⑦	Q	13840103	R	01	-	10AU10	2	13840102	15498540	15432291	15432295	15432286
⑥	P	13775593	R	01	-	04AU09	2	13775592	15498540	15432291	15432295	15432286
⑤	N	13670756	R	01	-	20AU07	2	13670754	15498540	15432291	15432295	15432286
⑤	M	13670755	R	01	-	20AU07	2	13670753	15498540	15432291	15432295	15432286
⑤	L	13670757	R	01	-	10OC07	2	13673960	15498540	15432291	15432295	15432286
③	K	13662622	R	01	-	20AU07	2	13662621	15498540	15432291	15432295	15432286
④	J	13655518	R	01	-	20AU07	2	13655517	15498540	15432291	15432295	15432286
④	I	13657650	R	01	-	20AU07	0	13657648	15498540	15432291	15432293	15432286
④	H	13657649	R	01	-	20AU07	0	13657648	13579677	15432291	15432293	15432286
③	G	13609821	R	02	-	20AU07	0	13609816	15498540	15432291	15432293	15432286
③	F	13609817	R	02	-	20AU07	0	13609816	13579677	15432291	15432293	15432286
③	E	13609820	R	01	-	11OC06	0	13609814	15498540	15432291	15432293	15432286
②	D	13609815	R	01	-	11OC06	0	13609814	13579677	15432291	15432293	15432286
②	C	13580662	R	01	-	11OC06	0	13579676	15498540	15432291	15432293	15432286
②	B	13579681	R	01	-	11OC06	0	13579676	13579677	15432291	15432293	15432286
	A	15498535	R	02	-	26OC05	2	15498531	15498540	15432291	15432295	15432286

		1	2	3	4	5	6	7	8	9	10	11	12	13	14	15	16	17	18	19	20	21	22	23	24	25	26	27	28	29	30	31	32	33	34	35	36	37	38
㉓㉒ PART-NO.: ~~33127627~~	OPEN								x			x																	x							x	x	x	
	CLOSE	o	o	o	o	o	o	o		o	o		o	o	o	o	o	o	o	o	o	o	o	o	o	o	o	o		o	o	o	o	o	o				o
	CAVITY								1.5			1.5																	1.5							1.5	1.5	1.5	
	CAVITY	1	2	3	4	5	6	7	8	9	10	11	12	13	14	15	16	17	18	19	20	21	22	23	24	25	26	27	28	29	30	31	32	33	34	35	36	37	38
㉔㉓㉒ PART-NO.: 15538439	OPEN	x												x	x	x			x								x	x	x	x	x								
	CLOSE		o	o	o	o	o	o	o	o	o	o	o				o	o		o	o	o	o	o	o						o	o	o	o	o	o	o	o	o
	CAVITY	4.8												4.8	1.5	1.5			1.5							2.8	1.5	1.5	1.5	1.5									
	CAVITY	1	2	3	4	5	6	7	8	9	10	11	12	13	14	15	16	17	18	19	20	21	22	23	24	25	26	27	28	29	30	31	32	33	34	35	36	37	38
㉑ PART-NO.: 33104301	OPEN	x					x			x	x	x	x	x												x	x	x		x	x			x	x		x	x	
	CLOSE		o	o	o	o		o	o						o	o	o	o	o	o	o	o	o	o	o				o			o	o			o			o
	CAVITY	4.8					1.5			1.5	1.5	1.5	1.5	4.8												2.8	1.5	1.5		1.5	1.5			1.5	1.5		1.5	1.5	
	CAVITY	1	2	3	4	5	6	7	8	9	10	11	12	13	14	15	16	17	18	19	20	21	22	23	24	25	26	27	28	29	30	31	32	33	34	35	36	37	38
㉓⑳ PART-NO.: 33116047 33148264	OPEN	x					x				x	x		x												x	x	x		x	x			x	x		x	x	
	CLOSE		o	o	o	o		o	o	o			o		o	o	o	o	o	o	o	o	o	o	o				o			o	o			o			o
	CAVITY	4.8					1.5				1.5	1.5		4.8												2.8	1.5	1.5		1.5	1.5			1.5	1.5		1.5	1.5	
	CAVITY	1	2	3	4	5	6	7	8	9	10	11	12	13	14	15	16	17	18	19	20	21	22	23	24	25	26	27	28	29	30	31	32	33	34	35	36	37	38
㉒⑲ PART-NO.: ~~15536550~~	OPEN	x			x	x			x		x			x	x		x	x	x	x				x		x	x		x	x		x						x	x
	CLOSE		o	o			o	o		o		o	o			o					o	o	o		o			o			o		o	o	o	o	o		
	CAVITY	4.8			1.5	1.5			1.5		1.5			4.8	1.5		1.5	1.5	1.5	1.5				1.5		2.8	1.5		1.5	1.5		1.5						1.5	2.8
	CAVITY	1	2	3	4	5	6	7	8	9	10	11	12	13	14	15	16	17	18	19	20	21	22	23	24	25	26	27	28	29	30	31	32	33	34	35	36	37	38
⑱ PART-NO.: 15533088	OPEN	x	x	x	x	x	x	x	x	x	x			x	x		x	x	x	x	x	x	x	x		x	x	x	x	x	x					x	x		x
	CLOSE											o	o			o									o							o	o	o	o			o	
	CAVITY	4.8	1.5	1.5	1.5	1.5	1.5	1.5	1.5	1.5	1.5			4.8	1.5		1.5	1.5	1.5	1.5	1.5	1.5	1.5	1.5		2.8	1.5	1.5	1.5	1.5	1.5					1.5	1.5		2.8
	CAVITY	1	2	3	4	5	6	7	8	9	10	11	12	13	14	15	16	17	18	19	20	21	22	23	24	25	26	27	28	29	30	31	32	33	34	35	36	37	38
⑱ PART-NO.: 15533085	OPEN	x	x	x	x	x	x		x	x	x	x		x				x	x		x	x			x	x			x	x	x		x	x	x	x	x		x
	CLOSE							o					o		o	o	o			o			o	o			o	o				o						o	
	CAVITY	4.8	1.5	1.5	1.5	1.5	1.5		1.5	1.5	1.5	1.5		4.8				1.5	1.5		1.5	1.5			1.5	2.8			1.5	1.5	1.5		1.5	1.5	1.5	1.5	1.5		2.8
	CAVITY	1	2	3	4	5	6	7	8	9	10	11	12	13	14	15	16	17	18	19	20	21	22	23	24	25	26	27	28	29	30	31	32	33	34	35	36	37	38
㉙⑰ PART-NO.: 13962189 35447397	OPEN	x												x	x		x	x	x	x	x	x	x	x		x	x	x	x	x	x								
	CLOSE		o	o	o	o	o	o	o	o	o	o	o			o									o							o	o	o	o	o	o	o	o
	CAVITY	4.8												4.8	1.5		1.5	1.5	1.5	1.5	1.5	1.5	1.5	1.5		2.8	1.5	1.5	1.5	1.5	1.5								
	CAVITY	1	2	3	4	5	6	7	8	9	10	11	12	13	14	15	16	17	18	19	20	21	22	23	24	25	26	27	28	29	30	31	32	33	34	35	36	37	38
⑰ PART-NO.: 13964768	OPEN	x		x	x	x	x		x	x	x	x		x				x	x		x	x			x	x			x	x	x		x	x	x	x	x		x
	CLOSE		o					o					o		o	o	o			o			o	o			o	o				o						o	
	CAVITY	4.8		1.5	1.5	1.5	1.5		1.5	1.5	1.5	1.5		4.8				1.5	1.5		1.5	1.5			1.5	2.8			1.5	1.5	1.5		1.5	1.5	1.5	1.5	1.5		2.8
	CAVITY	1	2	3	4	5	6	7	8	9	10	11	12	13	14	15	16	17	18	19	20	21	22	23	24	25	26	27	28	29	30	31	32	33	34	35	36	37	38
㉒⑯ PART-NO.: ~~15509883~~	OPEN	x		x	x		x				x	x		x	x	x	x		x	x			x	x	x	x	x	x		x	x			x	x	x	x	x	x
	CLOSE		o			o		o	o	o			o					o			o	o							o			o	o						
	CAVITY	4.8		1.5	1.5		1.5				1.5	1.5		4.8	1.5	1.5	1.5		1.5	1.5			1.5	1.5	1.5	2.8	1.5	1.5		1.5	1.5			1.5	1.5	1.5	1.5	1.5	2.8
	CAVITY	1	2	3	4	5	6	7	8	9	10	11	12	13	14	15	16	17	18	19	20	21	22	23	24	25	26	27	28	29	30	31	32	33	34	35	36	37	38
⑮ PART-NO.: 13980834	OPEN	x					x				x	x		x					x	x						x	x	x		x	x		x	x	x	x	x	x	
	CLOSE		o	o	o	o		o	o	o			o		o	o	o	o			o	o	o	o	o				o			o							o
	CAVITY	4.8					1.5				1.5	1.5		4.8					1.5	1.5						2.8	1.5	1.5		1.5	1.5		1.5	1.5	1.5	1.5	1.5	1.5	
	CAVITY	1	2	3	4	5	6	7	8	9	10	11	12	13	14	15	16	17	18	19	20	21	22	23	24	25	26	27	28	29	30	31	32	33	34	35	36	37	38
⑮ PART-NO.: 13980832	OPEN	x		x	x	x	x		x	x			x	x	x	x	x	x	x	x	x					x	x		x	x	x	x	x	x	x				x
	CLOSE		o					o			o	o										o	o	o	o			o								o	o	o	
	CAVITY	4.8		1.5	1.5	1.5	1.5		1.5	1.5			1.5	4.8	1.5	1.5	1.5	1.5	1.5	1.5	1.5					2.8	1.5		1.5	1.5	1.5	1.5	1.5	1.5	1.5				2.8
	CAVITY	1	2	3	4	5	6	7	8	9	10	11	12	13	14	15	16	17	18	19	20	21	22	23	24	25	26	27	28	29	30	31	32	33	34	35	36	37	38
⑭ PART-NO.: 13957056	OPEN	x					x	x			x	x		x							x					x	x	x		x	x			x	x		x	x	
	CLOSE		o	o	o	o			o	o			o		o	o	o	o	o	o		o	o	o	o				o			o	o			o			o
	CAVITY	4.8					1.5	1.5			1.5	1.5		4.8							1.5					2.8	1.5	1.5		1.5	1.5			1.5	1.5		1.5	1.5	
	CAVITY	1	2	3	4	5	6	7	8	9	10	11	12	13	14	15	16	17	18	19	20	21	22	23	24	25	26	27	28	29	30	31	32	33	34	35	36	37	38
⑬ PART-NO.: 13896194	OPEN	x	x	x	x	x	x		x	x	x	x		x												x	x		x	x	x	x				x	x		x
	CLOSE							o					o		o	o	o	o	o	o	o	o	o	o	o			o					o	o	o			o	
	CAVITY	4.8	1.5	1.5	1.5	1.5	1.5		1.5	1.5	1.5	1.5		4.8												2.8	1.5		1.5	1.5	1.5	1.5				1.5	1.5		2.8
	CAVITY	1	2	3	4	5	6	7	8	9	10	11	12	13	14	15	16	17	18	19	20	21	22	23	24	25	26	27	28	29	30	31	32	33	34	35	36	37	38
⑪ PART-NO.: 13895980	OPEN	x			x				x					x	x		x	x	x	x	x				x	x	x		x	x		x		x		x	x	x	x
	CLOSE		o	o		o	o	o		o	o	o	o			o						o	o	o				o			o		o		o				
	CAVITY	4.8			1.5				1.5					4.8	1.5		1.5	1.5	1.5	1.5	1.5				1.5	2.8	1.5		1.5	1.5		1.5		1.5		1.5	1.5	1.5	2.8
	CAVITY	1	2	3	4	5	6	7	8	9	10	11	12	13	14	15	16	17	18	19	20	21	22	23	24	25	26	27	28	29	30	31	32	33	34	35	36	37	38
⑨ PART-NO.: 13859056	OPEN	x	x		x				x		x		x	x	x	x	x	x	x	x						x	x	x	x	x	x	x							x
	CLOSE			o		o	o	o		o		o									o	o	o	o	o								o	o	o	o	o	o	
	CAVITY	4.8	1.5		1.5				1.5		1.5		1.5	4.8	1.5	1.5	1.5	1.5	1.5	1.5						2.8	1.5	1.5	1.5	1.5	1.5	1.5							2.8
	CAVITY	1	2	3	4	5	6	7	8	9	10	11	12	13	14	15	16	17	18	19	20	21	22	23	24	25	26	27	28	29	30	31	32	33	34	35	36	37	38
⑧ PART-NO.: 13853124	OPEN	x			x				x					x	x		x	x	x	x	x					x	x		x	x		x		x					x
	CLOSE		o	o		o	o	o		o	o	o	o			o						o	o	o	o			o			o		o		o	o	o	o	
	CAVITY	4.8			1.5				1.5					4.8	1.5		1.5	1.5	1.5	1.5	1.5					2.8	1.5		1.5	1.5		1.5		1.5					2.8
	CAVITY	1	2	3	4	5	6	7	8	9	10	11	12	13	14	15	16	17	18	19	20	21	22	23	24	25	26	27	28	29	30	31	32	33	34	35	36	37	38
⑦ PART-NO.: 13840103	OPEN	x			x		x	x	x	x				x	x	x		x	x	x	x	x	x		x	x	x	x	x	x		x		x		x	x	x	x
	CLOSE		o	o		o					o	o	o				o							o							o		o		o				
	CAVITY	4.8			1.5		1.5	1.5	1.5	1.5				4.8	1.5	1.5		1.5	1.5	1.5	1.5	1.5	1.5		1.5	2.8	1.5	1.5	1.5	1.5		1.5		1.5		1.5	1.5	1.5	2.8
	CAVITY	1	2	3	4	5	6	7	8	9	10	11	12	13	14	15	16	17	18	19	20	21	22	23	24	25	26	27	28	29	30	31	32	33	34	35	36	37	38
⑥ PART-NO.: 13775593	OPEN	x					x	x						x	x		x		x	x	x		x		x	x	x			x	x	x	x	x	x	x		x	x
	CLOSE		o	o	o	o			o	o	o	o	o			o		o				o		o				o	o								o		
	CAVITY	4.8					1.5	1.5						4.8	1.5		1.5		1.5	1.5	1.5		1.5		1.5	2.8	1.5			1.5	1.5	1.5	1.5	1.5	1.5	1.5		1.5	2.8
	CAVITY	1	2	3	4	5	6	7	8	9	10	11	12	13	14	15	16	17	18	19	20	21	22	23	24	25	26	27	28	29	30	31	32	33	34	35	36	37	38
⑤ PART-NO.: 13670756	OPEN	x			x		x	x	x					x	x			x	x	x	x	x			x	x	x					x		x	x	x		x	x
	CLOSE		o	o		o				o	o	o	o			o	o						o	o				o	o	o	o		o				o		
	CAVITY	4.8			1.5		1.5	1.5	1.5					4.8	1.5			1.5	1.5	1.5	1.5	1.5			1.5	2.8	1.5					1.5		1.5	1.5	1.5		1.5	2.8
	CAVITY	1	2	3	4	5	6	7	8	9	10	11	12	13	14	15	16	17	18	19	20	21	22	23	24	25	26	27	28	29	30	31	32	33	34	35	36	37	38
⑤ PART-NO.: 13670755	OPEN	x			x		x	x	x					x	x	x		x	x	x	x	x	x		x	x	x					x		x		x	x	x	x
	CLOSE		o	o		o				o	o	o	o				o							o				o	o	o	o		o		o				
	CAVITY	4.8			1.5		1.5	1.5	1.5					4.8	1.5	1.5		1.5	1.5	1.5	1.5	1.5	1.5		1.5	2.8	1.5					1.5		1.5		1.5	1.5	1.5	2.8
	CAVITY	1	2	3	4	5	6	7	8	9	10	11	12	13	14	15	16	17	18	19	20	21	22	23	24	25	26	27	28	29	30	31	32	33	34	35	36	37	38
④ PART-NO.: 13662622	OPEN	x			x		x	x	x					x	x	x		x	x	x	x	x	x		x	x	x					x		x		x		x	x
	CLOSE		o	o		o				o	o	o	o				o							o				o	o	o	o		o		o		o		
	CAVITY	4.8			1.5		1.5	1.5	1.5					4.8	1.5	1.5		1.5	1.5	1.5	1.5	1.5	1.5		1.5	2.8	1.5					1.5		1.5		1.5		1.5	2.8
	CAVITY	1	2	3	4	5	6	7	8	9	10	11	12	13	14	15	16	17	18	19	20	21	22	23	24	25	26	27	28	29	30	31	32	33	34	35	36	37	38
④ PART-NO.: 13657649 13657650	OPEN	x		x	x	x	x				x	x	x	x												x		x	x	x		x	x	x		x	x	x	x
	CLOSE		o					o	o	o					o	o	o	o	o	o	o	o	o	o	o		o				o				o				
	CAVITY	4.8		1.5	1.5	1.5	1.5				1.5	1.5	1.5	4.8												2.8		1.5	1.5	1.5		1.5	1.5	1.5		1.5	1.5	1.5	2.8
	CAVITY	1	2	3	4	5	6	7	8	9	10	11	12	13	14	15	16	17	18	19	20	21	22	23	24	25	26	27	28	29	30	31	32	33	34	35	36	37	38
③ PART-NO.: 13609817 13609821	OPEN	x				x	x							x	x	x	x	x	x	x	x		x			x	x	x			x	x	x	x	x		x		x
	CLOSE		o	o	o			o	o	o	o	o	o									o		o	o				o	o						o		o	
	CAVITY	4.8				1.5	1.5							4.8	1.5	1.5	1.5	1.5	1.5	1.5	1.5		1.5			2.8	1.5	1.5			1.5	1.5	1.5	1.5	1.5		1.5		2.8
	CAVITY	1	2	3	4	5	6	7	8	9	10	11	12	13	14	15	16	17	18	19	20	21	22	23	24	25	26	27	28	29	30	31	32	33	34	35	36	37	38
②③ PART-NO.: 13609815 13609820	OPEN	x		x			x							x			x	x	x	x	x		x			x					x	x	x	x	x				x
	CLOSE		o		o	o		o	o	o	o	o	o		o	o						o		o	o		o	o	o	o						o	o	o	
	CAVITY	4.8		1.5			1.5							4.8			1.5	1.5	1.5	1.5	1.5		1.5			2.8					1.5	1.5	1.5	1.5	1.5				2.8
	CAVITY	1	2	3	4	5	6	7	8	9	10	11	12	13	14	15	16	17	18	19	20	21	22	23	24	25	26	27	28	29	30	31	32	33	34	35	36	37	38
PART-NO.: ② 13579681 ② 13580662 ④ 13655518 ⑤ 13670757 ⑩ ~~15498533~~ ⑩ 15498534 ⑩ 15498536 ⑫ 13924619 ㉑ 33110415 ㉕ 33235477 ㉕ 33235465 ㉕ 33235466 ㉕ 33235472 ㉕ 33235479 ㉕ 33235480 ㉗ 35206546 ㉗ 35206547	OPEN	x	x	x	x	x	x	x	x	x	x	x	x	x	x	x	x	x	x	x	x	x	x	x	x	x	x	x	x	x	x	x	x	x	x	x	x	x	x
	CLOSE																																						
	CAVITY	4.8	1.5	1.5	1.5	1.5	1.5	1.5	1.5	1.5	1.5	1.5	1.5	4.8	1.5	1.5	1.5	1.5	1.5	1.5	1.5	1.5	1.5	1.5	1.5	2.8	1.5	1.5	1.5	1.5	1.5	1.5	1.5	1.5	1.5	1.5	1.5	1.5	2.8
	CAVITY	1	2	3	4	5	6	7	8	9	10	11	12	13	14	15	16	17	18	19	20	21	22	23	24	25	26	27	28	29	30	31	32	33	34	35	36	37	38
PART-NO.: 15498535	OPEN	x		x	x	x	x	x			x	x		x												x		x	x	x		x		x		x	x		x
	CLOSE		o						o	o			o		o	o	o	o	o	o	o	o	o	o	o		o				o		o		o			o	
	CAVITY	4.8		1.5	1.5	1.5	1.5	1.5			1.5	1.5		4.8												2.8		1.5	1.5	1.5				1.5		1.5	1.5		2.8

DRAWING NUMBER							
15498537							
SIZE	SCALE	FRAME NO	SHEET NO	STG	REV	N/P	
A1x4	1:1	2 OF 2	1 OF 1	R	30	-	

OPTIONAL DESIGN FOR CLOSED CAVITYS

OPTION 1 - SMALLER HOLE DIAMETER

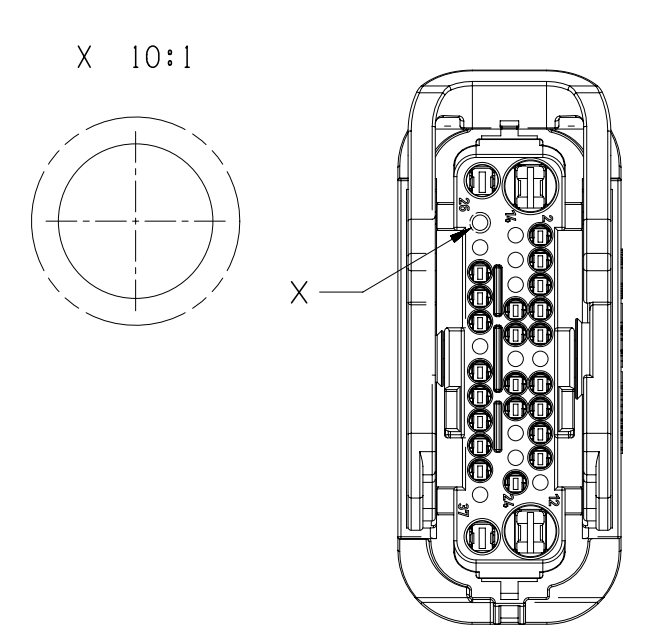

OPTION 2 - BLOCKING RIB

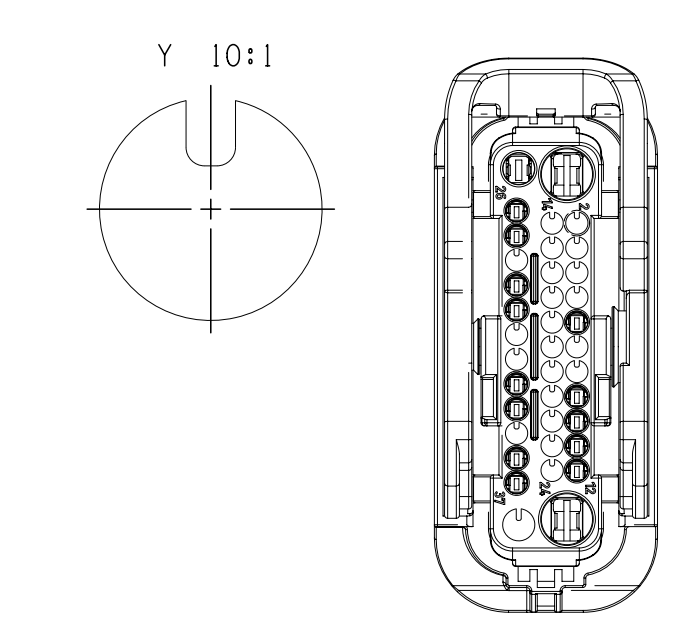

		1	2	3	4	5	6	7	8	9	10	11	12	13	14	15	16	17	18	19	20	21	22	23	24	25	26	27	28	29	30	31	32	33	34	35	36	37	38
㉚ PART-NO.: 36039784	OPEN	X				X	X	X	X		X	X	X	X	X	X	X	X	X	X		X	X	X	X	X	X	X	X	X		X			X	X	X	X	X
	CLOSE		O	O	O					O											O										O		O	O					
	CAVITY	4.8				1.5	1.5	1.5	1.5		1.5	1.5	1.5	4.8	1.5	1.5	1.5	1.5	1.5	1.5		1.5	1.5	1.5	1.5	2.8	1.5	1.5	1.5	1.5		1.5			1.5	1.5	1.5	1.5	2.8
	CAVITY	1	2	3	4	5	6	7	8	9	10	11	12	13	14	15	16	17	18	19	20	21	22	23	24	25	26	27	28	29	30	31	32	33	34	35	36	37	38
㉙ PART-NO.: ~~35719540~~	OPEN	x				x	x	x	x		x	x	x	x	x	x	x	x	x	x		x	x	x	x	x	x	x	x	x		x			x	x	x	x	x
	CLOSE		o	o	o					o											o										o		o	o					
	CAVITY	4.8				1.5	1.5	1.5	1.5		1.5	1.5	1.5	4.8	1.5	1.5	1.5	1.5	1.5	1.5		1.5	1.5	1.5	1.5	2.8	1.5	1.5	1.5	1.5		1.5			1.5	1.5	1.5	1.5	2.8
	CAVITY	1	2	3	4	5	6	7	8	9	10	11	12	13	14	15	16	17	18	19	20	21	22	23	24	25	26	27	28	29	30	31	32	33	34	35	36	37	38
㉙ PART-NO.: 35709806 35818262	OPEN	x	x			x	x	x	x	x	x		x	x	x	x	x		x	x		x	x	x	x	x	x	x	x	x		x			x	x	x	x	x
	CLOSE			o	o							o						o			o										o		o	o					
	CAVITY	4.8	1.5			1.5	1.5	1.5	1.5	1.5	1.5		1.5	4.8	1.5	1.5	1.5		1.5	1.5		1.5	1.5	1.5	1.5	2.8	1.5	1.5	1.5	1.5		1.5			1.5	1.5	1.5	1.5	2.8
	CAVITY	1	2	3	4	5	6	7	8	9	10	11	12	13	14	15	16	17	18	19	20	21	22	23	24	25	26	27	28	29	30	31	32	33	34	35	36	37	38
㉙ PART-NO.: 35710510	OPEN	x				x	x	x	x	x	x	x	x	x	x	x	x	x	x	x	x	x	x	x	x	x													x
	CLOSE		o	o	o																						o	o	o	o	o	o	o	o	o	o	o	o	
	CAVITY	4.8				1.5	1.5	1.5	1.5	1.5	1.5	1.5	1.5	4.8	1.5	1.5	1.5	1.5	1.5	1.5	1.5	1.5	1.5	1.5	1.5	2.8													2.8
	CAVITY	1	2	3	4	5	6	7	8	9	10	11	12	13	14	15	16	17	18	19	20	21	22	23	24	25	26	27	28	29	30	31	32	33	34	35	36	37	38
㉙ PART-NO.: 35322917	OPEN	x	x	x										x	x	x	x		x	x	x	x				x						x	x	x	x				x
	CLOSE				o	o	o	o	o	o	o	o	o					o					o	o	o		o	o	o	o	o					o	o	o	
	CAVITY	4.8	1.5	1.5										4.8	1.5	1.5	1.5		1.5	1.5	1.5	1.5				2.8						1.5	1.5	1.5	1.5				2.8
	CAVITY	1	2	3	4	5	6	7	8	9	10	11	12	13	14	15	16	17	18	19	20	21	22	23	24	25	26	27	28	29	30	31	32	33	34	35	36	37	38
㉙ PART-NO.: 35183111	OPEN	x		x	x	x			x		x			x	x		x	x	x	x	x					x	x		x	x		x		x				x	x
	CLOSE		o				o	o		o		o	o			o						o	o	o	o			o			o		o		o	o	o		
	CAVITY	4.8		1.5	1.5	1.5			1.5		1.5			4.8	1.5		1.5	1.5	1.5	1.5	1.5					2.8	1.5		1.5	1.5		1.5		1.5				1.5	2.8
	CAVITY	1	2	3	4	5	6	7	8	9	10	11	12	13	14	15	16	17	18	19	20	21	22	23	24	25	26	27	28	29	30	31	32	33	34	35	36	37	38
㉘ PART-NO.: 35290581	OPEN	x	x				x				x	x		x												x	x	x		x	x		x	x	x		x	x	
	CLOSE			o	o	o		o	o	o			o		o	o	o	o	o	o	o	o	o	o	o				o			o				o			o
	CAVITY	4.8	1.5				1.5				1.5	1.5		4.8												2.8	1.5	1.5		1.5	1.5		1.5	1.5	1.5		1.5	1.5	
	CAVITY	1	2	3	4	5	6	7	8	9	10	11	12	13	14	15	16	17	18	19	20	21	22	23	24	25	26	27	28	29	30	31	32	33	34	35	36	37	38
㉗㉙ PART-NO.: 35264860 35500579	OPEN	x		x	x	x			x		x			x	x		x	x	x	x	x					x	x		x	x		x		x				x	x
	CLOSE		o				o	o		o		o	o			o						o	o	o	o			o			o		o		o	o	o		
	CAVITY	4.8		1.5	1.5	1.5			1.5			1.5		4.8	1.5		1.5	1.5	1.5	1.5	1.5					2.8	1.5		1.5	1.5		1.5		1.5				1.5	2.8
	CAVITY	1	2	3	4	5	6	7	8	9	10	11	12	13	14	15	16	17	18	19	20	21	22	23	24	25	26	27	28	29	30	31	32	33	34	35	36	37	38
㉗ PART-NO.: 35202510	OPEN	x	x		x		x	x	x	x		x		x	x		x		x	x	x	x			x	x	x		x		x	x	x	x	x		x	x	x
	CLOSE			o		o					o		o			o		o					o	o				o		o						o			
	CAVITY	4.8	1.5		1.5		1.5	1.5	1.5	1.5		1.5		4.8	1.5		1.5		1.5	1.5	1.5	1.5			1.5	2.8	1.5		1.5		1.5	1.5	1.5	1.5	1.5		1.5	1.5	2.8
	CAVITY	1	2	3	4	5	6	7	8	9	10	11	12	13	14	15	16	17	18	19	20	21	22	23	24	25	26	27	28	29	30	31	32	33	34	35	36	37	38
㉗ PART-NO.: 35202509	OPEN	x	x		x		x	x	x	x	x	x		x	x		x	x	x	x	x	x	x	x	x	x	x		x	x	x	x	x	x	x	x	x	x	x
	CLOSE			o		o							o			o												o											
	CAVITY	4.8	1.5		1.5		1.5	1.5	1.5	1.5	1.5	1.5		4.8	1.5		1.5	1.5	1.5	1.5	1.5	1.5	1.5	1.5	1.5	2.8	1.5		1.5	1.5	1.5	1.5	1.5	1.5	1.5	1.5	1.5	1.5	2.8
	CAVITY	1	2	3	4	5	6	7	8	9	10	11	12	13	14	15	16	17	18	19	20	21	22	23	24	25	26	27	28	29	30	31	32	33	34	35	36	37	38
㉗ PART-NO.: 35202508	OPEN	x	x		x		x	x	x	x	x	x		x	x		x	x	x	x	x	x	x	x	x	x	x		x	x	x	x	x	x	x	x	x	x	x
	CLOSE			o		o							o			o												o											
	CAVITY	4.8	1.5		1.5		1.5	1.5	1.5	1.5	1.5	1.5		4.8	1.5		1.5	1.5	1.5	1.5	1.5	1.5	1.5	1.5	1.5	2.8	1.5		1.5	1.5	1.5	1.5	1.5	1.5	1.5	1.5	1.5	1.5	2.8
	CAVITY	1	2	3	4	5	6	7	8	9	10	11	12	13	14	15	16	17	18	19	20	21	22	23	24	25	26	27	28	29	30	31	32	33	34	35	36	37	38
㉗ PART-NO.: 35121934	OPEN	x	x	x		x		x			x	x		x												x		x											x
	CLOSE				o		o		o	o			o		o	o	o	o	o	o	o	o	o	o	o		o		o	o	o	o	o	o	o	o	o	o	
	CAVITY	4.8	1.5	1.5		1.5		1.5			1.5	1.5		4.8												2.8		1.5											2.8
	CAVITY	1	2	3	4	5	6	7	8	9	10	11	12	13	14	15	16	17	18	19	20	21	22	23	24	25	26	27	28	29	30	31	32	33	34	35	36	37	38
㉖ PART-NO.: 35142685	OPEN	x			x				x				x	x	x	x	x	x	x	x	x	x	x			x	x	x	x	x				x			x		x
	CLOSE		o	o		o	o	o		o	o	o												o	o						o	o	o		o	o		o	
	CAVITY	4.8			1.5				1.5				1.5	4.8	1.5	1.5	1.5	1.5	1.5	1.5	1.5	1.5	1.5			2.8	1.5	1.5	1.5	1.5				1.5			1.5		2.8
	CAVITY	1	2	3	4	5	6	7	8	9	10	11	12	13	14	15	16	17	18	19	20	21	22	23	24	25	26	27	28	29	30	31	32	33	34	35	36	37	38
㉖ PART-NO.: 35087044	OPEN	x	x	x	x	x	x		x					x	x	x	x	x	x	x	x		x		x	x	x		x	x	x	x	x	x	x			x	x
	CLOSE							o		o	o	o	o									o		o				o								o	o		
	CAVITY	4.8	1.5	1.5	1.5	1.5	1.5		1.5					4.8	1.5	1.5	1.5	1.5	1.5	1.5	1.5		1.5		1.5	2.8	1.5		1.5	1.5	1.5	1.5	1.5	1.5	1.5			1.5	2.8
	CAVITY	1	2	3	4	5	6	7	8	9	10	11	12	13	14	15	16	17	18	19	20	21	22	23	24	25	26	27	28	29	30	31	32	33	34	35	36	37	38
㉖ PART-NO.: 35087045	OPEN	x		x			x				x	x		x			x		x	x						x	x	x		x	x			x	x		x	x	x
	CLOSE		o		o	o		o	o	o			o		o	o		o			o	o	o	o	o				o			o	o			o			
	CAVITY	4.8		1.5			1.5				1.5	1.5		4.8			1.5		1.5	1.5						2.8	1.5	1.5		1.5	1.5			1.5	1.5		1.5	1.5	2.8
	CAVITY	1	2	3	4	5	6	7	8	9	10	11	12	13	14	15	16	17	18	19	20	21	22	23	24	25	26	27	28	29	30	31	32	33	34	35	36	37	38
㉖ PART-NO.: 35087016	OPEN	x			x	x			x	x			x	x	x	x	x	x	x	x					x	x	x		x	x		x							x
	CLOSE		o	o			o	o			o	o										o	o	o	o			o			o		o	o	o	o	o	o	
	CAVITY	4.8			1.5	1.5			1.5	1.5			1.5	4.8	1.5	1.5	1.5	1.5	1.5	1.5					1.5	2.8	1.5		1.5	1.5		1.5							2.8
	CAVITY	1	2	3	4	5	6	7	8	9	10	11	12	13	14	15	16	17	18	19	20	21	22	23	24	25	26	27	28	29	30	31	32	33	34	35	36	37	38
㉖ PART-NO.: 35086898	OPEN	x	x		x	x		x	x	x				x	x	x	x	x	x	x	x					x	x		x	x		x	x	x					x
	CLOSE			o			o				o	o	o									o	o	o	o			o			o				o	o	o	o	
	CAVITY	4.8	1.5		1.5	1.5		1.5	1.5	1.5				4.8	1.5	1.5	1.5	1.5	1.5	1.5	1.5					2.8	1.5		1.5	1.5		1.5	1.5	1.5					2.8
	CAVITY	1	2	3	4	5	6	7	8	9	10	11	12	13	14	15	16	17	18	19	20	21	22	23	24	25	26	27	28	29	30	31	32	33	34	35	36	37	38
㉖ PART-NO.: 35037374	OPEN	x		x	x	x			x				x	x	x	x	x	x	x	x	x		x			x	x	x	x	x		x		x				x	x
	CLOSE		o				o	o		o	o	o										o		o	o						o		o		o	o	o		
	CAVITY	4.8		1.5	1.5	1.5			1.5				1.5	4.8	1.5	1.5	1.5	1.5	1.5	1.5	1.5		1.5			2.8	1.5	1.5	1.5	1.5		1.5		1.5				1.5	2.8
	CAVITY	1	2	3	4	5	6	7	8	9	10	11	12	13	14	15	16	17	18	19	20	21	22	23	24	25	26	27	28	29	30	31	32	33	34	35	36	37	38
㉖㉖ PART-NO.: 33333067 33343719	OPEN	x		x			x				x	x		x			x	x	x	x					x	x	x	x		x	x		x	x	x	x	x	x	x
	CLOSE		o		o	o		o	o	o			o		o	o						o	o	o	o				o			o							
	CAVITY	4.8		1.5			1.5				1.5	1.5		4.8			1.5	1.5	1.5	1.5					1.5	2.8	1.5	1.5		1.5	1.5		1.5	1.5	1.5	1.5	1.5	1.5	2.8
	CAVITY	1	2	3	4	5	6	7	8	9	10	11	12	13	14	15	16	17	18	19	20	21	22	23	24	25	26	27	28	29	30	31	32	33	34	35	36	37	38
㉖ PART-NO.: 33294436	OPEN	x			x				x		x		x	x	x	x	x	x	x	x						x	x	x	x	x		x							x
	CLOSE		o	o		o	o	o		o		o										o	o	o	o	o						o		o	o	o	o	o	o	
	CAVITY	4.8			1.5				1.5		1.5		1.5	4.8	1.5	1.5	1.5	1.5	1.5	1.5						2.8	1.5	1.5	1.5	1.5		1.5							2.8
	CAVITY	1	2	3	4	5	6	7	8	9	10	11	12	13	14	15	16	17	18	19	20	21	22	23	24	25	26	27	28	29	30	31	32	33	34	35	36	37	38
㉖㉖ PART-NO.: 33212819 33212818	OPEN	x	x		x	x			x				x	x	x		x	x	x	x	x					x	x		x	x		x	x	x					x
	CLOSE			o			o	o		o	o	o				o						o	o	o	o			o			o				o	o	o	o	
	CAVITY	4.8	1.5		1.5	1.5			1.5				1.5	4.8	1.5		1.5	1.5	1.5	1.5	1.5					2.8	1.5		1.5	1.5		1.5	1.5	1.5					2.8
	CAVITY	1	2	3	4	5	6	7	8	9	10	11	12	13	14	15	16	17	18	19	20	21	22	23	24	25	26	27	28	29	30	31	32	33	34	35	36	37	38
㉖ PART-NO.: 35040250	OPEN	x	x		x		x		x					x	x	x	x	x	x	x	x					x	x	x	x	x		x		x		x			x
	CLOSE			o		o		o		o	o	o	o									o	o	o	o						o		o		o		o	o	
	CAVITY	4.8	1.5		1.5		1.5		1.5					4.8	1.5	1.5	1.5	1.5	1.5	1.5	1.5					2.8	1.5	1.5	1.5	1.5		1.5		1.5		1.5			2.8
	CAVITY	1	2	3	4	5	6	7	8	9	10	11	12	13	14	15	16	17	18	19	20	21	22	23	24	25	26	27	28	29	30	31	32	33	34	35	36	37	38
㉖ PART-NO.: 35040232	OPEN	x			x			x	x					x	x	x	x	x	x	x	x					x	x	x	x	x		x		x					x
	CLOSE		o	o		o	o			o	o	o	o									o	o	o	o						o		o		o	o	o	o	
	CAVITY	4.8			1.5			1.5	1.5					4.8	1.5	1.5	1.5	1.5	1.5	1.5	1.5					2.8	1.5	1.5	1.5	1.5		1.5		1.5					2.8
	CAVITY	1	2	3	4	5	6	7	8	9	10	11	12	13	14	15	16	17	18	19	20	21	22	23	24	25	26	27	28	29	30	31	32	33	34	35	36	37	38
㉔ PART-NO.: 33236153	OPEN	x		x	x		x		x					x	x	x	x	x	x	x	x					x	x	x	x	x		x		x	x	x			x
	CLOSE		o			o		o		o	o	o	o									o	o	o	o						o		o				o	o	
	CAVITY	4.8		1.5	1.5		1.5		1.5					4.8	1.5	1.5	1.5	1.5	1.5	1.5	1.5					2.8	1.5	1.5	1.5	1.5		1.5		1.5	1.5	1.5			2.8
	CAVITY	1	2	3	4	5	6	7	8	9	10	11	12	13	14	15	16	17	18	19	20	21	22	23	24	25	26	27	28	29	30	31	32	33	34	35	36	37	38
㉓ PART-NO.: 33185037	OPEN	x					x				x	x		x							x					x	x	x		x	x			x	x		x	x	
	CLOSE		o	o	o	o		o	o	o			o		o	o	o	o	o	o		o	o	o	o				o			o	o			o			o
	CAVITY	4.8					1.5				1.5	1.5		4.8							1.5					2.8	1.5	1.5		1.5	1.5			1.5	1.5		1.5	1.5	

SYMBOL DEFINITION		
A DIMENSION WITHOUT AN INSPECTION REPORT SYMBOL ( ) DOES NOT REQUIRE INSPECTION. IT MAY BE CONTROLLED ON THE INDIVIDUAL COMPONENT DRAWING.	TOTAL NO OF INSPECTIONS REQUIRED	5
	LAST NO. USED	5

MISSING SYMBOLS
###############

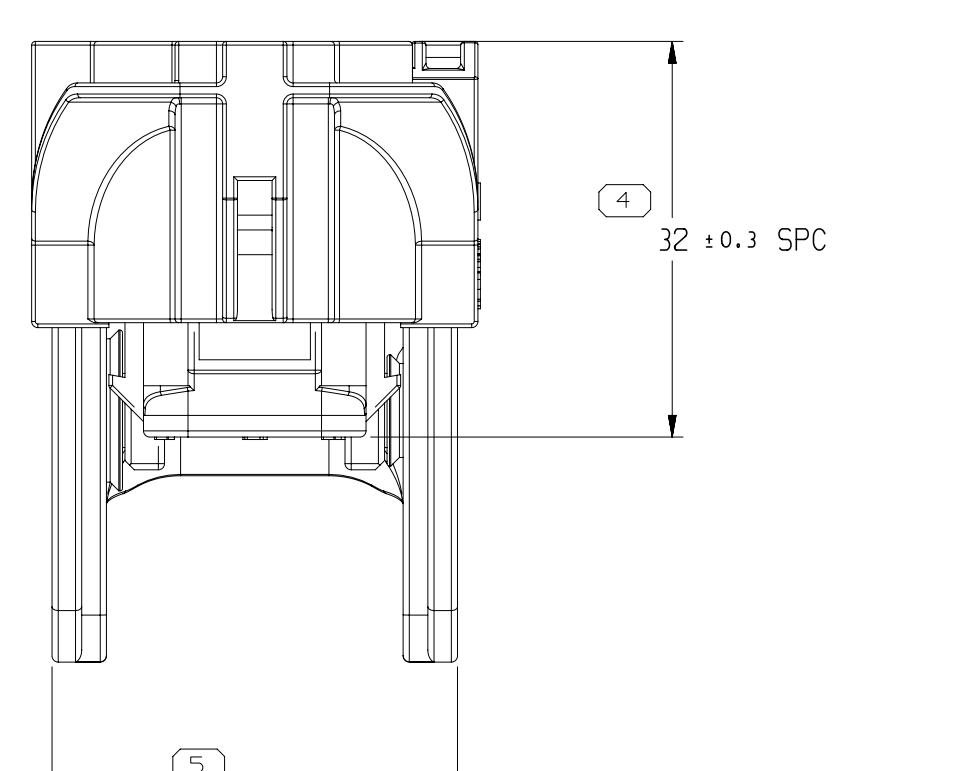

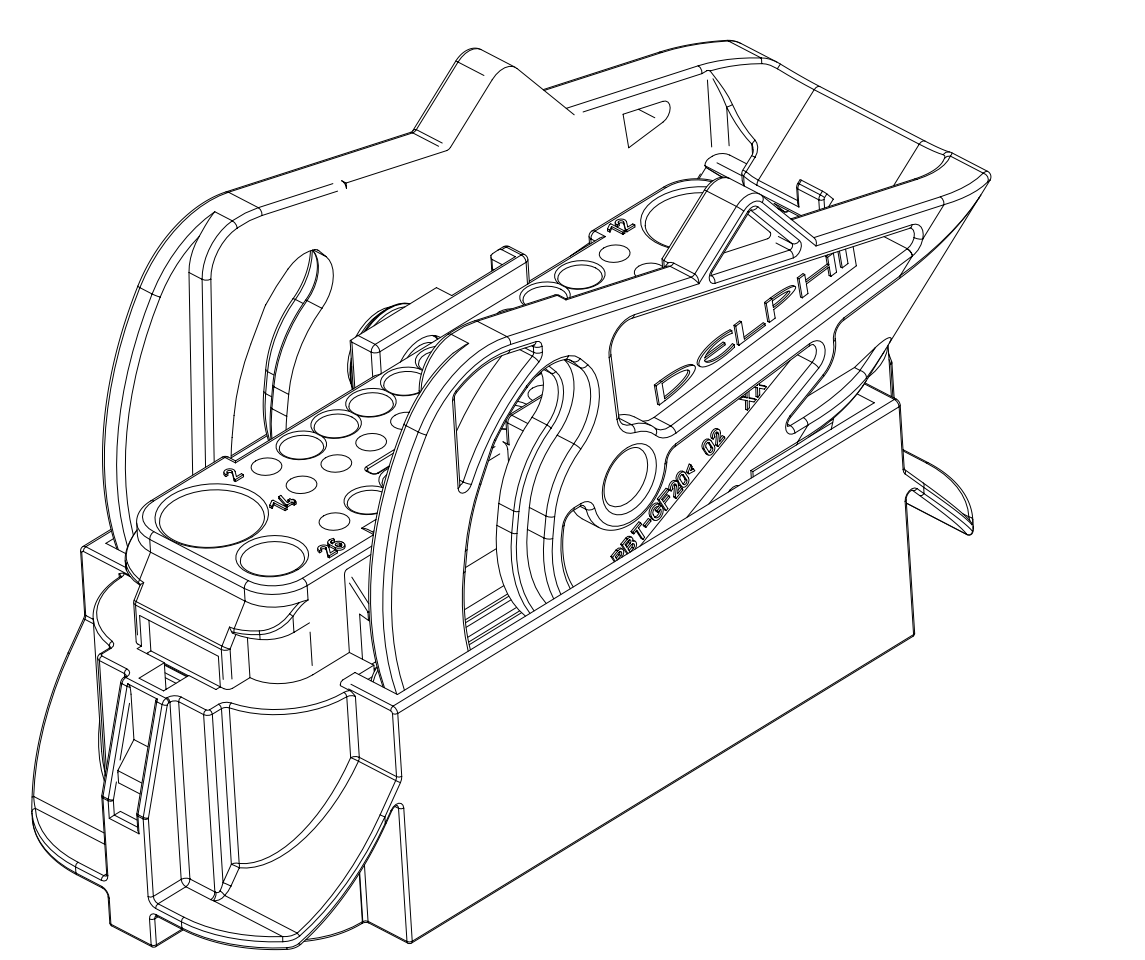

SCALE 2:1

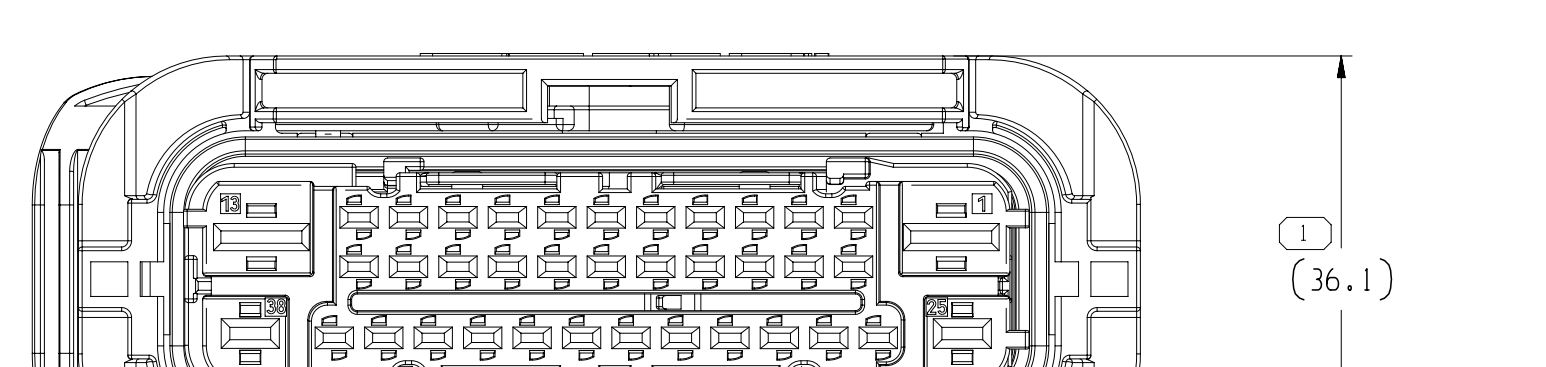

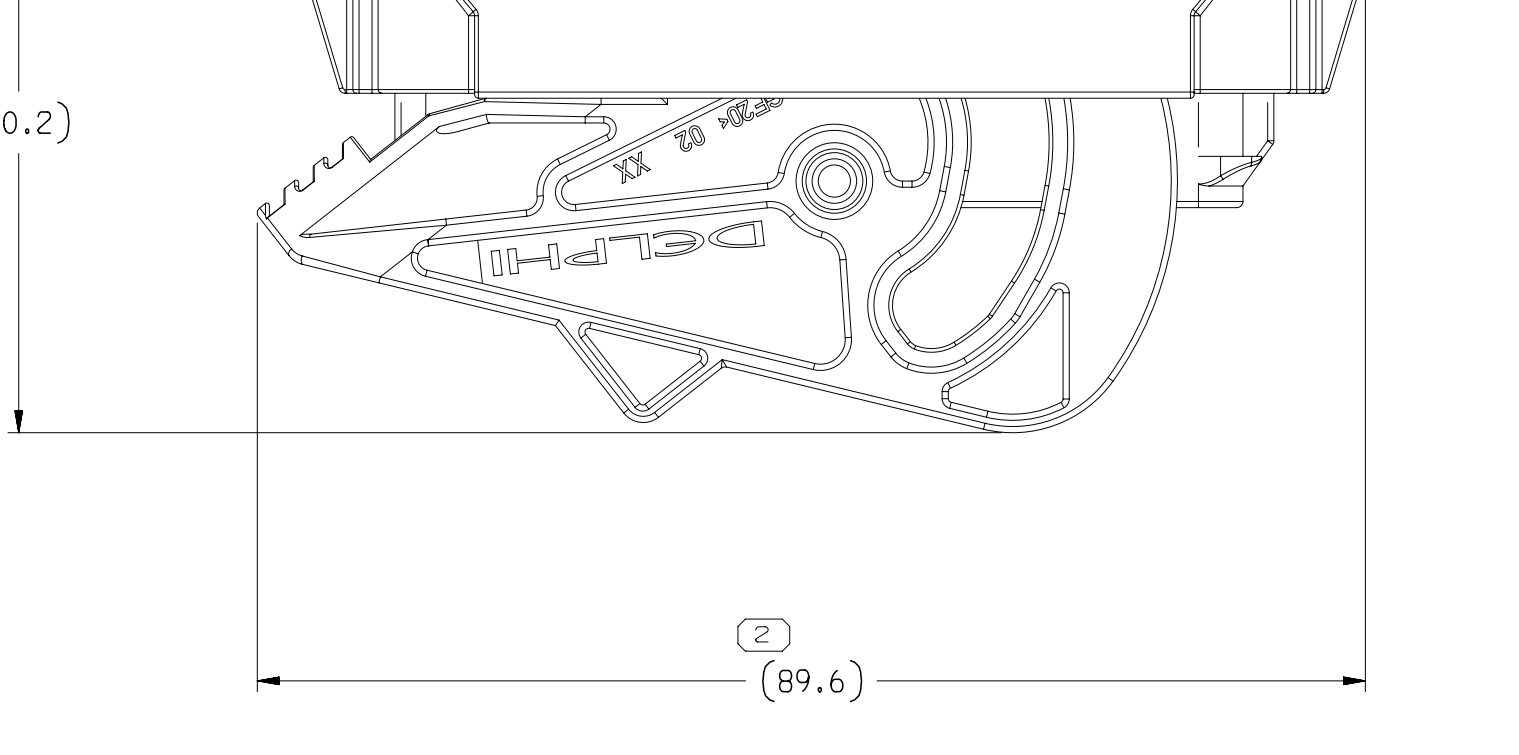

DWG STATUS										
DATE	STG	REV	N/P	CHG	ZONE	REVISION HISTORY	AUTH	DR	APVD 1	APVD 2
15NO04	R	01	-	-		INITIAL RELEASE	N/A	PAN	HAC	WIS
17JN05	R	01	AA	-	K12	ASSEMBLY PART NO. WAS SINGLE PART NO.	N/A	PAN	HAC	WIS
26OC05	R	02	-	-	E11 C11	DIM. 66.9+/-0.35 WAS 67.3(PAGE2) THREE RIBS ADDED ON TOP SIDE (PAGE2)	N/A	PAN	HAC	WIS
11OC06	R	03	-	-	F-K7	PART NO.:13579681;13580662;13609815 ADDED PART NO.:13609820;13609817;13609821 ADDED	N/A	KAS	LUE	WIS
11OC06	R	03	AA	-	I14	CHART WITH CAVITY ALLOCATION ADDED	N/A	KAS	LUE	WIS
11OC06	R	03	AB	-	A5	CHART MODIFY	N/A	KAS	LUE	WIS
26JA07	R	03	AC	-	J16	PART NO:13579676;13609814;13609816 WITHOUT ASSEMBLY PART NO.	N/A	KAS	LUE	WIS
09FE07	R	03	AD	-	F-K7	LEVER 13579677 WITH 15498540 CHANGED, WRITE ERROR	N/A	KAS	SAT	SKR
20AU07	R	04	-	-	K-L7 I-J7 F-G12	PART NO:13657649;13657650;13655518; 13662622 ADDED PART NO:13609816 MODIFIED,CAVITY 3 CLOSED	N/A	KAS	SAT	SKR
20AU07	R	04	AA	-	A1	PAGE 2 ADDED (VIEW OF SINGLE PARTS)	N/A	KAS	SAT	SKR
12SE07	R	04	AB	-	I-J7	MODUL 15432295 WAS 15432293(WRITE ERROR)	N/A	KAS	SAT	LES
06NO07	R	05	-	-	H7	PART NO:13670757;13670755;13670756 ADDED	N/A	KAS	SAT	LES
04AU09	R	06	-	-	E8	PART NO.: 13775593 ADDED (SEE PAGE2)	N/A	HOF	HAC	SKR
04AU09	R	06	AA	-	C4 E9	RAL COLOR DEVIATION ACCEPTANCE "SIMILAR" ADDED	N/A	HOF	HAC	SKR
10SE10	R	06	AB	-		MANUFACTOR-CODE/ COUNTRY OF ORIGIN CORRESPOUNDING TO PRODUCTION LOCATION	N/A	KAS	HAC	SYS
24SE10	R	07	-	-	D7 J16	PART NO.: 13840103 ADDED; SEE PAGE 2	N/A	KAS	SAT	SYS
11FE11	R	08	-	-	C7 J16	PART NO.: 13853124 ADDED; SEE PAGE 2	N/A	KAS	SAT	SYS
15FE11	R	09	-	-	C-E18 H16	PART NO.: 13859056 ADDED; SEE PAGE 2	N/A	WOZ	TEC	SKR
15JL11	R	10	-	-	D-F7	PART NO:15498534;15498536;15498533 ADDED	N/A	KAS	SAT	SYS
15JL11	R	10	AA	-	A1	PAGE 3 ADDED/ CHART FOR VARIANTS PAGE 3	N/A	KAS	SAT	SYS
22JL11	R	11	-	-	C7 J16	PART NO.:13895980 ADDED; SEE PAGE 2&3	N/A	KAS	SAT	--
01NO11	R	12	-	-		REDRAWN PD DRAWING;CHANGE DRAWING FORMAT DELETE PAGE 3;MOVE CAVITY CHART TO PAGE1 PART NO.: 13924619 ADDED	415987	KW	JWG	EZ
22NO11	R	13	-	-	M13 J16 C13	PART NO.:13896194 ADDED	416229	KW	JWG	EZ
28NO11	R	13	AA	-	C10	CORRECTED DRAWING ASM PART13859056:LEVER PART WAS 13579677 ASM PART13896194:LEVER PART WAS 15498540	416267	KW	JWG	EZ
16DE11	R	13	AB	-	C10 H16	PART NO.:13896194 LEVER PART NO. WAS 13579677	416482	JW	KW	EZ
23AU12	R	14	-	-	C14 M7	PART NO.:13957056 ADDED	419329	AM	JWG	EZ
27SE12	R	15	-	-		PART NO.:13980832; 13980834 ADDED	419402	AM	JWG	EZ
19NO12	R	16	-	-		PART NO.:15509883 ADDED CORRECTED DRAWING ASM PART 13980834:LEVER PART NO. WAS 13579677	420465	AM	JWG	EZ
28MR13	R	17	-	-		PART NO.:13964768; 13962189 ADDED	421920	AM	JWG	EZ
17AP13	R	18	-	-		PART NO.:15533085; 15533088 ADDED	422149	AM	JWG	EZ
30AP13	R	19	-	-		PART NO.:15536550 ADDED	422348	AM	JWG	EZ
26OC13	R	20	-	-		PART NO.:33116047 ADDED	424258	AM	JWG	EZ
17FE14	R	21	-	-		PART NO.:33104301, 33110415 ADDED		KHG	STO	SYS
15MY14	R	22	-	-		PART NO.: 33127627, 15538439 ADDED PART NO.: 15536550, 15509883 DEACTIVATED MISSING ANNOTATIONS FOR 33110415 ADDED		SCI	MLE	SIK
02SE14	R	23	-	-		PART NO.: 33148264, 33185037 ADDED PART NO.: 33127627, 15538439 DEACTIVATED NEW VIEW FOR 33110415 ADDED		SCI	MLE	SIK
15AP15	R	23	AA		M13	CAVITY DEFINITION CORRECTED FOR 33185037 (CAVITY 11 WAS UNDEFINED)		SCI	MLE	SIK
01JL15	R	24	-	-		PART NO. 33236153 ADDED PART NO. 15538439 ACTIVATED		SCI	MA	SIK
15OC15	R	25	-	-		PART NO. 33235465, 33235466, 33235472, 33235477, 33235479, 33235480 ADDED		SCI	MA	SIK
02AP18	R	26	-	-		PART NO. 35040232,35040250 ADDED 33235465,33235477 ADDED 33212819 ; 33294436 ADDED 33333067 ; 33343719 ADDED 35037374 ; 35086898 ADDED 35087016 ; 35087045 ADDED 35087044 ; 35142685 ADDED 33212818 ADDED	436506	HP	WDZ	JWG
14MA18	R	26	AA	-		PART NO. 35121934, 35202508 ADDED 35202509, 35202510 ADDED 35206546, 35206547 ADDED	NA	HP	SBH	SBH
22JN18	R	27	-	-		33235465 & 33235477 - CONN WAS 33240635	439740	AHY	AHY	RLK
12OC18	R	27	AA	-		PART NO. 35264860 ADDED	NA	HP	HP	SBH
14DE18	R	28	-	-		PART NO. 35290581 ADDED	NA	HP	JYC	SBH
11FE19	R	29	-	-		PART NO. 35183111,35322917 ADDED	NA	NS	SA	DG
14NO19	R	29	AA	-		PART NO. 35202508, 35202509, 35202510 RELEASED.	444737	ZML	HZ	SBH
15NO19	R	29	AB	-		ADD ASSM PART. MARK FOR 35202510.	444817	ZML	HZ	SBH
22NO19	R	29	AC	-		PART NO. 33235472, 33235479, 33235480 RELEASED.	444836	ZML	HZ	SBH
20FE20	R	29	AD	-		PART NO. 35447397 ADDED	445134	ZML	HZ	SBH
02SE20	R	29	AE	-		CORRECT PART NUMBER.	445878	ZML	HZ	SBH
27SE20	R	29	AF	-		PN NO. 35500579 ADDED.	446017	ZML	HZ	SBH
12OC22	R	29	AG	-		PN NO. 35710510,35709806,35719540 RELEASED.	448473	ZLS	HZ	JZ
16AU23	R	29	AH	-		35710510 INFORMATION UPDATED,	448873	ZLS	HZ	JZ
16AU23	R	29	AH	-		PN NO. 35818262 ADDED	449845	ZLS	HS	JZ
30OC23	R	29	AI	-		DIM. 4 UPDATE TOLERANCE.	448873	ZLS	HZ	JZ
11OC25	R	30	-			PART NO: 36039784 ADDED	106015	GUR	RAM	SYS

NOTES

1. UNLESS OTHERWISE SPECIFIED AND/OR INDICATED:

   DIMENSIONS ARE TO FACE OF VIEW SHOWN AND AUTOMATICALLY ROUNDED BY COMPUTER FOR INSPECTION (SEE MATH MODEL FOR PRECISE DIMENSIONS). FOR ALL OTHER DIMENSIONS NOT SHOWN BUT REQUIRED FOR TOOL BUILD, SEE MATH MODEL FOR PRECISE TOOL PATH DATA.

2. MATING PART COVER SEE DWG-NO.:
   15432297, 15498544, 136536051

3. MATING PART KM SEE DWG-NO.: 15498549

(4) PROCESS SENSITIVE DIMENSION

DIMENSIONS ENCLOSED IN ( ) INDICATE REFERENCE DIMENSIONS AND NO TOLERANCE LIMITS ARE ESTABLISHED

DIMENSIONAL RANGE (MM)									CHART E1
FROM	> 0	> 20	> 30	> 70	>100	>150	>200	>250	>300
TO	20	30	70	100	150	200	250	300	400
TOLERANCE UNLESS OTHERWISE SPECIFIED	±0.15	±0.2	±0.3	±0.4	±0.5	±0.6	±0.8	±1	±1.2
ANGULAR TOLERANCE ±2°									

A ——— LINE DRAWN THROUGH A PART NUMBER INDICATES THAT PHYSICAL PARTS ARE NOT AVAILABLE FOR ORDERING.

PART NUMBERS THAT DO NOT HAVE A LINE PRESENT INDICATE THAT PHYSICAL PARTS ARE AVAILABLE FOR ORDERING.

CONTACT APTIV SALES TO ASSURE AVAILABILITY OF PARTS.

DWG TYPE: PART DRAWING

STYLE

VOLUME (CM³)

DISTR CODE: D

UNLESS OTHERWISE SPECIFIED

THIS DOCUMENT IS IN ACCORDANCE WITH ASME Y14.5M-1994 AS AMENDED BY THE GM GLOBAL DIMENSIONING AND TOLERANCING ADDENDUM-2001. SEPARATE PATTERNS OF FEATURES MAY BE GAGED SEPARATELY REGARDLESS OF DATUM REFERENCES.

ALL DIMENSIONS ARE IN MILLIMETERS

REFERENCE

THIRD ANGLE PROJECTION

DO NOT SCALE

USE MATH DATA

CAD NX

•APTIV•

CONNECTION SYSTEMS
Anting, China

COPYRIGHT 2011 APTIV. ALL RIGHTS RESERVED.

THIS DRAWING IS THE PROPERTY OF APTIV AND CONTAINS APTIV CONFIDENTIAL INFORMATION. THE REPRODUCTION, DISTRIBUTION AND UTILIZATION OF THIS DOCUMENT OR ITS RELATED CAD MATH DATA, AS WELL AS COMMUNICATION OF ANY CONTENT TO OTHERS, WITHOUT EXPRESS AUTHORIZATION, IS PROHIBITED.

		DATE
DR		
APVD1	KUN WU	28NO11
APVD2	JIANWEI GUO	28NO11
APVD3	ERIC ZHOU	28NO11
APVD4		
APVD5		

SUBSTANCES OF CONCERN AND RECYCLED CONTENT PER APTIV 10949001

MATERIAL: SEE COMPONENT DRAWING

DRAWING NAME: TAXI ASM CONN 38 F 1.5 MCP 2.8 MCP 4.8 MCP SLD MODULAR

DRAWING NUMBER						
15498537						
SIZE	SCALE	FRAME NO	SHEET NO	STG	REV	N/P
A1x4	1:1	1 OF 2	1 OF 1	R	30	-

15498537

User: 21fmg6
Part: 15498537-CUS01-S01/30 Date: 06-Mar-26 Time: 17:37:10