| ASSOCIATED PARTS | CODING | APTIV PART NUMBER |
|---|---|---|
| PLUG 890 SW GEN-2 | CODE-1 | 35464221 |
| PLUG 1200 SW | CODE-1 | 35561611 |
| PLUG 800 SW | CODE-1 | 35638408 |

| DWG STATUS | | | | | ZONE | REVISION HISTORY | AUTH | DR | APVD 1 | APVD 2 |
|---|---|---|---|---|---|---|---|---|---|---|
| DATE | STG | REV | N/P | CHG | | | | | | |
| 03DE25 | R | 01 | - | - | - | INITIAL RELEASE | | M.GOP | S.LAC | T.LEC |

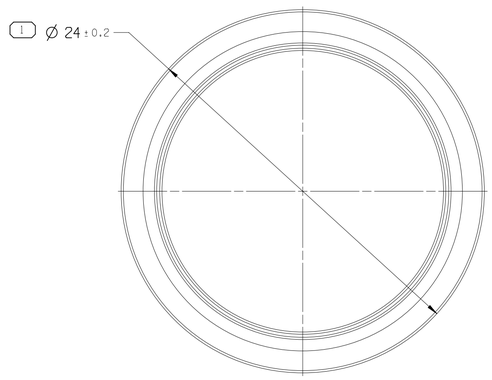


SECTION A-A

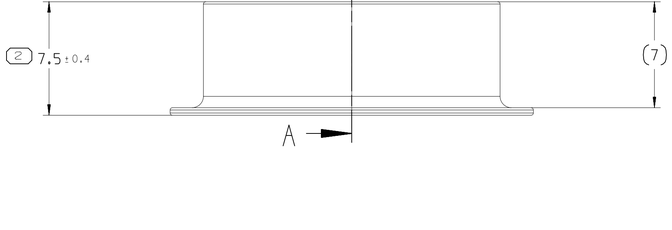


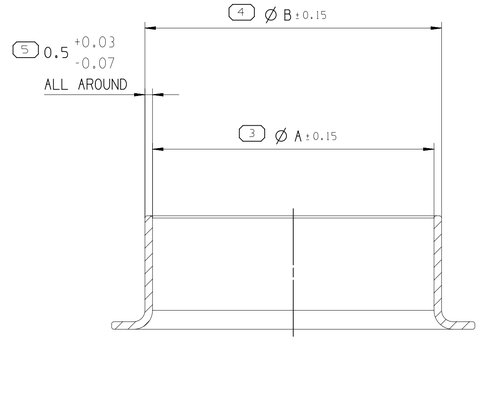


3D VIEW
SCALE 2:1

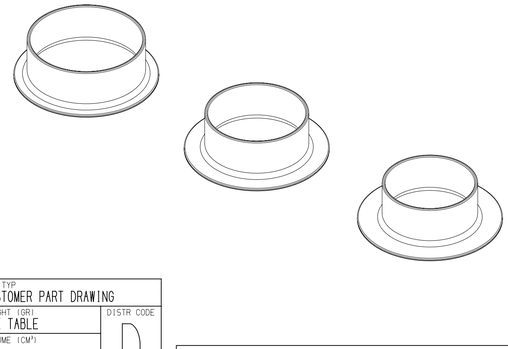

| N° | DESCRIPTION | PART N° | WEIGHT (G) | Ø A | Ø B |
|---|---|---|---|---|---|
| 1 | INNER FERRULE 35 MM² | 35628301 | 2.652 | 14.8 | 15.8 |
| 2 | INNER FERRULE 50 MM² | 35628300 | 2.625 | 16.2 | 17.2 |
| 3 | INNER FERRULE 70 MM² | 35628299 | 2.554 | 18.6 | 19.6 |

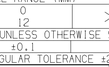


SHARP CORNER TOLERANCE

| | DIMENSIONAL RANGE (MM) | | CHART D |
|---|---|---|---|
| DIM TO CHECK | FROM | 0 | >12 |
| ( ) DIM FOR HELP | TO | 12 | |
| | TOLERANCE UNLESS OTHERWISE SPECIFIED | | |
| THEORETIC DIM | ±0.1 | ±0.2 | |
| | ANGULAR TOLERANCE ±2° | | |

DWG TYP
CUSTOMER PART DRAWING

WEIGHT (GR)
SEE TABLE

VOLUME (CM³)
-

ROUTING

DISTR CODE
D

UNLESS OTHERWISE SPECIFIED

GENERAL TOLERANCES ACCORDING TO:

SEE CHART

GD&T ACCORDING TO:

ISO1101

REFERENCE

FIRST ANGLE PROJECTION

DO NOT SCALE

USE MATH DATA

CAD NX

**•APTIV•**

CONNECTION SYSTEMS

Chennai, India

COPYRIGHT 2025 APTIV. ALL RIGHTS RESERVED.

THIS DRAWING IS THE PROPERTY OF APTIV AND CONTAINS APTIV CONFIDENTIAL INFORMATION. THE REPRODUCTION, DISTRIBUTION AND UTILIZATION OF THIS DOCUMENT OR ITS RELATED CAD MATH DATA, AS WELL AS COMMUNICATION OF ANY CONTENT TO OTHERS, WITHOUT EXPRESS AUTHORIZATION, IS PROHIBITED.

| | | DATE |
|---|---|---|
| DR | M.GOPIKRISHNAN | 03DE25 |
| APVD1 | S.LACOTE | 03DE25 |
| APVD2 | T.LECOMTE | 03DE25 |
| APVD3 | | |
| APVD4 | | |
| APVD5 | | |

SUBSTANCES OF CONCERN AND RECYCLED CONTENT PER APTIV 1094900I

MATERIAL
COPPER ALLOY

DRAWING NAME
INNER FERRULE 35-50-70 MM²

DRAWING NUMBER
36056730

| SIZE | SCALE | FRAME NO | SHEET NO | STG | REV | N/P |
|---|---|---|---|---|---|---|
| A1 | 5:1 | 1 OF 1 | 1 OF 1 | R | 01 | - |

User: SuceK4
Part: 36056730-CUS02-S01/01 Date: 09-Jan-26 Time: 17:50:12
SuceK4,01092026,12:17,107pages,cus