DESIGNATED CHARACTERISTICS					QC1	KPC
2		LAST NO USED	K OR Q IN SYMBOL INDICATES CHECKPOINT	FIT/FUNCTION	C1	FF
1	1	TOTAL ON DRAWING		SAFETY/COMPLIANCE		SC

KPC NO	QC1 NO	TYPE	DESCRIPTION	RATIONALE	ZONE	SH	PTS
1	-	S/C	DIM #10 SEAL SURFACE DIAMETER	CRITICAL FOR SEALING	G14	1	1
-	2	C1	DIM #12 STOP TO LOCK	LOCKING FEATURE FOR ASSEMBLY	E10	1	1

SYMBOL DEFINITION

A DIMENSION WITHOUT AN INSPECTION REPORT SYMBOL DOES NOT REQUIRE INSPECTION. IT MAY BE CONTROLLED ON THE INDIVIDUAL COMPONENT DRAWING.

TOTAL NO OF INSPECTIONS REQUIRED	17
LAST NO. USED	18

MISSING SYMBOLS
16

DWG STATUS DATE	STG	REV	N/P	CHG	ZONE	REVISION HISTORY	AUTH	DR	APVD 1	APVD 2
17AU20	R	01	-	-		WAS PE459278 AND RELEASED PART DRAWING	552402	AN	DL	TM
21JA21	R	02	-	-		ALL PARTS - UPDATED PART AVAILABILITY AND DIM #6 WAS 50.6	554526	KRK	KRK	TM
02MY22	R	03	-	-		REVISED DIMS (3 PLCS) AND ADDED DIMS #8-#17 & NOTES #3-#5	557315	KRK	KRK	TM
29JN22	R	03	AA	-		REVISED GSD DESCRIPTION & BOM CHART, REMOVED DIM #16 AND CORRECTED PSD	557786	KRK	KRK	MIR
10NO22	R	03	AB	-		FORCE 75N MIN WAS 100N MIN ON "CAP RETENTION" NOTE	558957	GDH	JAA	MIR
09DE25	R	04	-	-		ADDED "KPC" CHART & SYMBOLS AND "CONTROL PLAN" NOTE	566051	AGC	CGD	AR

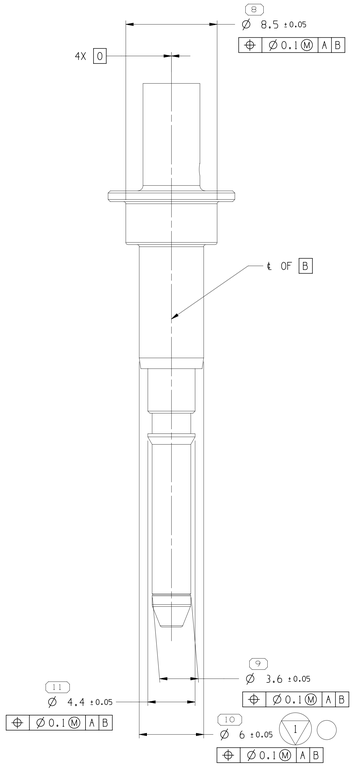

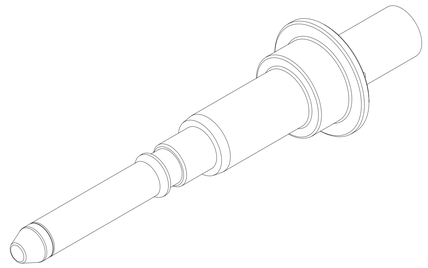

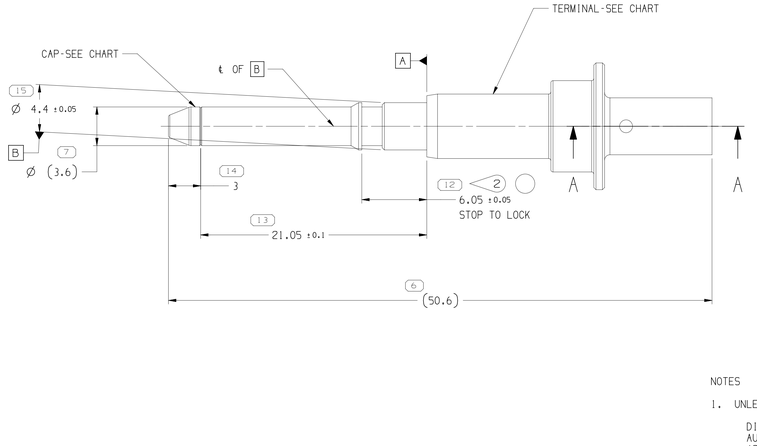

NOTES

1. UNLESS OTHERWISE SPECIFIED AND/OR INDICATED:

   DIMENSIONS ARE TO FACE OF VIEW SHOWN AND AUTOMATICALLY ROUNDED BY COMPUTER FOR INSPECTION (SEE MATH MODEL FOR PRECISE DIMENSIONS). FOR ALL OTHER DIMENSIONS NOT SHOWN BUT REQUIRED FOR TOOL BUILD, SEE MATH MODEL FOR PRECISE TOOL PATH DATA.

2. PLATING : SLIVER OVER NICKEL

(17) 3. PLASTIC CAP RETENTION FORCE 75N MINIMUM

4. PLASTIC CAP RETENTION DESIGN PER SUPPLIERS RECOMMENDATION. MUST MEET EXTERNAL DIMENSION FEATURES AND NOTE #3 RETENTION FORCE.

(18) 5. PLASTIC CAP MUST BE V-0 PER UL 94.

6. SEE CONTROL PLAN FOR QUALITY REQUIREMENTS FOR ANY KEY PRODUCT CHARACTERISTICS

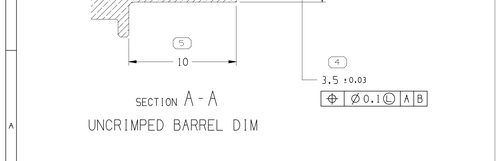

SECTION A - A
UNCRIMPED BARREL DIM

35446044	COPPER AG PLATED	35227779	1.015	9.07
PART NO	MAT'L SPEC	TERMINAL CAP	TERMINAL VOLUME (CM³)	TERMINAL WEIGHT (G)

(9) PROCESS SENSITIVE DIMENSION

DIMENSIONS ENCLOSED IN ( ) INDICATE REFERENCE DIMENSIONS AND NO TOLERANCE LIMITS ARE ESTABLISHED

DIMENSIONAL RANGE (MM)		CHART D
FROM	0	>12
TO	12	
TOLERANCE UNLESS OTHERWISE SPECIFIED	±0.1	±0.2
ANGULAR TOLERANCE ±2°		

A ——— LINE DRAWN THROUGH A PART NUMBER INDICATES THAT PHYSICAL PARTS ARE NOT AVAILABLE FOR ORDERING.

PART NUMBERS THAT DO NOT HAVE A LINE PRESENT INDICATE THAT PHYSICAL PARTS ARE AVAILABLE FOR ORDERING.

CONTACT APTIV SALES TO ASSURE AVAILABILITY OF PARTS.

DWG TYPE: PART DRAWING

STYLE

VOLUME (CM³): SEE CHART

DISTR CODE

UNLESS OTHERWISE SPECIFIED
THIS DOCUMENT IS IN ACCORDANCE WITH ASME Y14.5-2009, SEE APTIV ENGINEERING DESIGN STANDARD B6.2017 FOR ISO 10012:2004 RECONCILIATION REQUIREMENTS.

ALL DIMENSIONS ARE IN MILLIMETERS

REFERENCE

THIRD ANGLE PROJECTION

DO NOT SCALE
USE MATH DATA

NX

•APTIV•

CONNECTION SYSTEMS
Chennai, India

COPYRIGHT 2020 APTIV. ALL RIGHTS RESERVED.

THIS DRAWING IS THE PROPERTY OF APTIV AND CONTAINS APTIV CONFIDENTIAL INFORMATION. THE REPRODUCTION, DISTRIBUTION AND UTILIZATION OF THIS DOCUMENT OR ITS RELATED CAD MATH DATA, AS WELL AS COMMUNICATION OF ANY CONTENT TO OTHERS, WITHOUT EXPRESS AUTHORIZATION, IS PROHIBITED.

		DATE
DR		
APVD1	A.NALLUSAMY	17AU20
APVD2	L.DAYALAN	17AU20
APVD3	THOMAS MATHEWS	17AU20
APVD4		
APVD5		

SUBSTANCES OF CONCERN AND RECYCLED CONTI0949001 I0949001

MATERIAL: SEE CHART

DRAWING NAME: TERM M H/VOLTAGE 3.6MM AG/NI

DRAWING NUMBER: 35446044

SIZE	SCALE	FRAME NO	SHEET NO	STG	REV	N/P
A0	5:1	1 OF 1	1 OF 1	R	04	-

User: rg4847
PGM: 3_35446044_C_05_4_001.04 Opdet 09-Dec-25 Time 07:45:21