| SYMBOL DEFINITION | | |
|---|---|---|
| A DIMENSION WITHOUT AN INSPECTION REPORT SYMBOL ( ) DOES NOT REQUIRE INSPECTION. IT MAY BE CONTROLLED ON THE INDIVIDUAL COMPONENT DRAWING. | TOTAL NO OF INSPECTIONS REQUIRED | 15 |
| | LAST NO. USED | 13 |

MISSING SYMBOLS

NO MISSING SYMBOL NUMBER

QUALITY CUSTOMER INTERFACE (QCI)

DIMENSIONS LISTED BELOW (BY INSPECTION SYMBOL NUMBER) MUST BE INCLUDED IN THE PROCESS CONTROL PLAN FOR THIS PART

| INSPECTION SYMBOL | ZONE |
|---|---|
| 5 | G12 |
| 12 | G10 |
| 13 | G11 |

| DWG STATUS | | | | | ZONE | REVISION HISTORY | AUTH | DR | APVD 1 | APVD 2 |
|---|---|---|---|---|---|---|---|---|---|---|
| DATE | STG | REV | N/P | CHG | | | | | | |
| 28JA20 | R | 01 | - | - | | CREATED TAXI PART DRAWING 35262339 & 35417499 - ADDED TO TAXI 35417499 - RELEASED, WAS PE444239 | 550832 | JMR | JMR | MLP |
| 10FE20 | R | 02 | - | - | | ALL PARTS - UPDATED TERM GEN. COLUMN, ADDED TYPE COLUMN ,TYPE VIEWS AND RELATED DIMS | 550955 | AGC | AGC | MLP |
| 26FE20 | R | 03 | - | - | | ADDED DIMS #12 & #13 | 551123 | JS | JS | MLP |
| 27JL20 | R | 04 | - | - | | ALL PARTS - 3.05 +0.2/-0.1 WAS 3.05 ±0.05, ADDED QCI CHART, SCCM LEAK RATE, PULL TEST, MAXIMUM FLASH, COSMETIC IMPERFECTIONS PERMISSIBLE AND LASER WELDING PROCES NOTES | 552097 | AHG | AHG | MLP |
| 10FE21 | R | 05 | - | - | | ALL PARTS - ADDED MAX FLASH ALLOWED NOTE & POINT 'E' LABEL | 553481 | LVD | EVV | RNL |
| 24JA24 | R | 06 | - | - | | ALL PARTS - UPDATED PART AVAILABILITY (PN'S WERE NOT AVAILABLE) | 563157 | MLR | JAA | ACG |

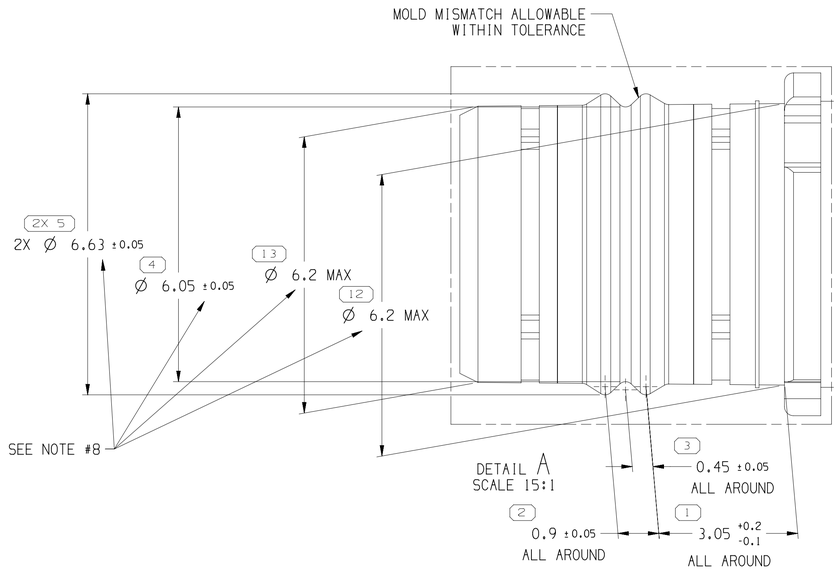


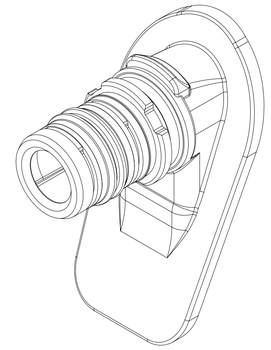

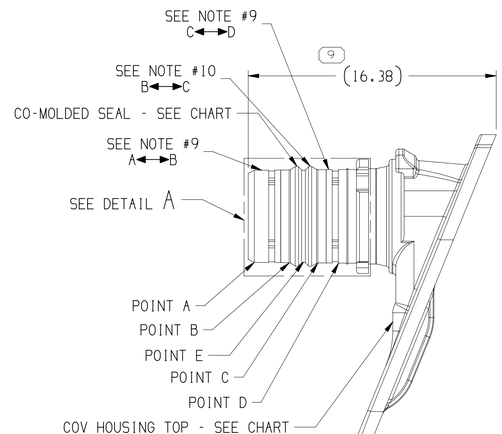


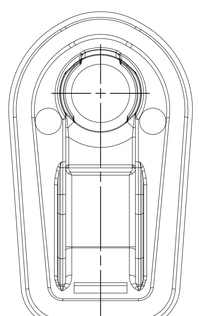

TYPE 101

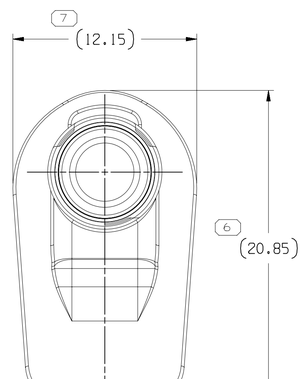


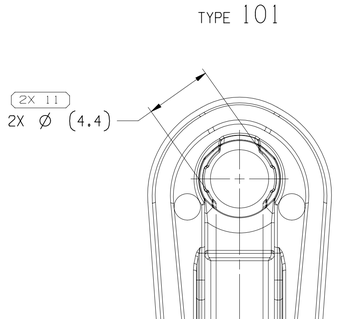


TYPE 102
SAME AS TYPE 101
EXCEPT AS SHOWN

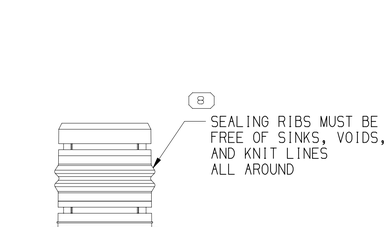


NOTES

1. UNLESS OTHERWISE SPECIFIED AND/OR INDICATED:

   DIMENSIONS ARE TO FACE OF VIEW SHOWN AND AUTOMATICALLY ROUNDED BY COMPUTER FOR INSPECTION (SEE MATH MODEL FOR PRECISE DIMENSIONS). FOR ALL OTHER DIMENSIONS NOT SHOWN BUT REQUIRED FOR TOOL BUILD, SEE MATH MODEL FOR PRECISE TOOL PATH DATA.

2. THIS PART USED IN ASSEMBLIES SHOWN ON TAXI - TBD.

3. REFERENCE MATING COMPONENTS OR EQUIVALENT:

   COVER HOUSING - 35262329.

4. THIS PART ACCEPTS THE FOLLOWING COMPONENTS OR EQUIVALENT:

   TERMINAL ASM KIT - SEE CHART
   MAX INSULATION CRIMP (ICD) MUST BE LESS THAN Ø5.9 mm.

5. FINAL LASER WELDED ASSEMBLY MUST PASS THE 1.0 SCCM LEAK RATE PER ES-A-755

6. FINAL LASER WELDED ASSEMBLY MUST PASS 90N PULL TEST

7. GENERAL MAXIMUM FLASH ALLOWED 0.25mm

8. MAXIMUM FLASH ALLOWED ON THIS SURFACE IS 0.1mm

9. MINOR COSMETIC IMPERFECTIONS NEXT TO SEALING AREA THAT DO NOT AFFECT THE PERFORMANCE OF THE PART AND PASS THE 1.0 SCCM LEAK RATE PER ES-A-755 ARE PERMISSIBLE PER VPS #E-010

10. MINOR COSMETIC IMPERFECTIONS ON SEALING AREA THAT DO NOT AFFECT THE PERFORMANCE OF THE PART AND PASS THE 1.0 SCCM LEAK RATE PER ES-A-755 ARE PERMISSIBLE PER VPS #E010

11. LASER WELDING PROCESS OF UPPER TO LOWER HOUSING MUST YIELD TOTAL COLLAPSE OF 0.15mm - 0.23mm (0.006" - 0.009")

12. MAXIMUM FLASH ALLOWED ON POINT 'E' IS 0.15 mm.

(5) PROCESS SENSITIVE DIMENSION

DIMENSIONS ENCLOSED IN ( ) INDICATE REFERENCE DIMENSIONS AND NO TOLERANCE LIMITS ARE ESTABLISHED

| PART NO | REV | N/P | TYPE | | | | | |
|---|---|---|---|---|---|---|---|---|
| 35417499 | 01 | AE | 102 | M5730008 ELAS VMQ SA BLU | 35417498 | 35227923 | 11-SEE TAXI 35359374 | 0.018 |
| 35262339 | 01 | AF | 101 | M5730007 ELAS VMQ SA GRN | 35262338 | 35010758 | 1-SEE TAXI 35010754 | 0.018 |
| PART NO | REV | N/P | TYPE | CO-MOLDED SEAL MATR'L SPEC & COLOR | COV HOUSING TOP | ACCEPTS TERMINAL | TERM GEN. | SEAL VOL. (CM³) |

| DIMENSIONAL RANGE (MM) | | | | | | | | | CHART EI |
|---|---|---|---|---|---|---|---|---|---|
| FROM | > 0 | > 20 | > 30 | > 70 | >100 | >150 | >200 | >250 | >300 |
| TO | 20 | 30 | 70 | 100 | 150 | 200 | 250 | 300 | 400 |
| TOLERANCE UNLESS OTHERWISE SPECIFIED | | | | | | | | | |
| | ±0.15 | ±0.2 | ±0.3 | ±0.4 | ±0.5 | ±0.6 | ±0.8 | ±1 | ±1.2 |
| ANGULAR TOLERANCE ±2° | | | | | | | | | |

A ——— LINE DRAWN THROUGH A PART NUMBER INDICATES THAT PHYSICAL PARTS ARE NOT AVAILABLE FOR ORDERING.

PART NUMBERS THAT DO NOT HAVE A LINE PRESENT INDICATE THAT PHYSICAL PARTS ARE AVAILABLE FOR ORDERING.

CONTACT APTIV SALES TO ASSURE AVAILABILITY OF PARTS.

DWG TYPE: PART DRAWING

STYLE

VOLUME (CM³): SEE CHART

DISTR CODE: D

UNLESS OTHERWISE SPECIFIED

THIS DOCUMENT IS IN ACCORDANCE WITH ASME Y14.5-2009. SEE APTIV ENGINEERING DESIGN STANDARD B6 2017 FOR ISO 1101:2004 RECONCILIATION REQUIREMENTS.

ALL DIMENSIONS ARE IN MILLIMETERS

REFERENCE

THIRD ANGLE PROJECTION

DO NOT SCALE

USE MATH DATA

CAD NX

**•APTIV•**

CONNECTION SYSTEMS
WARREN, OH

COPYRIGHT 2020 APTIV. ALL RIGHTS RESERVED.

THIS DRAWING IS THE PROPERTY OF APTIV AND CONTAINS APTIV CONFIDENTIAL INFORMATION. THE REPRODUCTION, DISTRIBUTION AND UTILIZATION OF THIS DOCUMENT OR ITS RELATED CAD MATH DATA, AS WELL AS COMMUNICATION OF ANY CONTENT TO OTHERS, WITHOUT EXPRESS AUTHORIZATION, IS PROHIBITED.

| | | DATE |
|---|---|---|
| DR | | |
| APVD1 | J. RAINEY | 28JA20 |
| APVD2 | J. RAINEY | 28JA20 |
| APVD3 | MATTHEW L. PENN | 28JA20 |
| APVD4 | | |
| APVD5 | | |

SUBSTANCES OF CONCERN AND RECYCLED CONTENT PER APTIV 1094001

MATERIAL: SEE CHART

DRAWING NAME: TAXI ASM COV HOUSING TOP

DRAWING NUMBER: 35417823

| SIZE | SCALE | FRAME NO | SHEET NO | STG | REV | N/P |
|---|---|---|---|---|---|---|
| A1 | 5:1 | 1 OF 1 | 1 OF 1 | R | 06 | - |

User: sgn4jc
Dwg: 35417823-CUSQ1-S01/06 Date: 25-Jan-24 Time: 07:07:52
C:\pn4_jc\012520024_07:06:84pass.prt