QUALITY CUSTOMER INTERFACE (QCI)	
DIMENSIONS LISTED BELOW (BY INSPECTION SYMBOL NUMBER) MUST BE INCLUDED IN THE PROCESS CONTROL PLAN FOR THIS PART	
INSPECTION SYMBOL	ZONE
2	J15
3	K14
13	E8
14	E10

SYMBOL DEFINITION		
A DIMENSION WITHOUT AN INSPECTION REPORT SYMBOL ( ) DOES NOT REQUIRE INSPECTION. IT MAY BE CONTROLLED ON THE INDIVIDUAL COMPONENT DRAWING.	TOTAL NO OF INSPECTIONS REQUIRED	25
	LAST NO. USED	20

MISSING SYMBOLS

NO MISSING SYMBOL NUMBER

DWG STATUS										
DATE	STG	REV	N/P	CHG	ZONE	REVISION HISTORY	AUTH	DR	APVD1	APVD2
10AP19	R	01	-	-		WAS PE412862 REVISED AND RELEASED	442817	AW	AW	MP
02MR20	R	01	AA	-		ADDED DATUM B ON DIM #14 AND REVISED "PART USED IN ASSEMBLIES" NOTE	551176	GDH	JGM	MP
27JL20	R	01	AB	-		ADDED QCI CHART, SCCM LEAK RATE, PULL TEST, MAXIMUM FLASH & LASER WELDING PROCESS NOTES. 3X Ø10.3 +0.1/-0.2 TYP WAS 3X Ø10.3 ±0.1 TYP. ⌖ 0.1 A B C WAS ⌖ 0.05 A B C. ⌖ Ø0.5 A B C WAS ⌖ Ø0.1 A B C. ⌖ Ø0.15 A WAS ⌖ Ø0.05 A. ⌒ 0.3 A B C WAS ⌒ 0.05 A B C (3 PLCS).	552097	AHG	AHG	MLP
10FE21	R	01	AC	-		UPDATED PDM ATTRIBUTES	553481	LVD	EVV	RNL
04MR21	R	01	AD	-		UPDATED PART AVAILABILITY	553710	GLG	GLG	JT

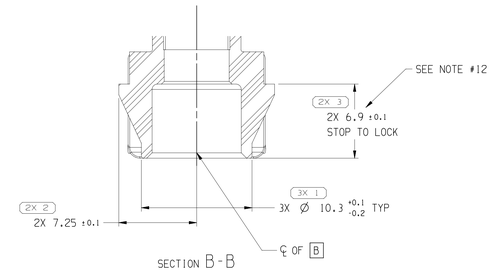

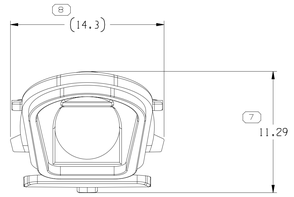

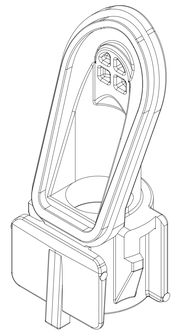

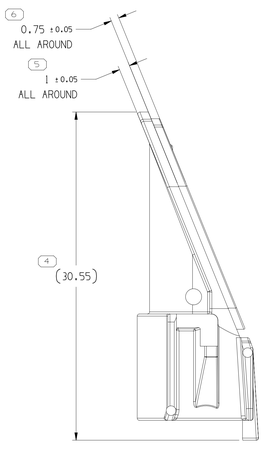

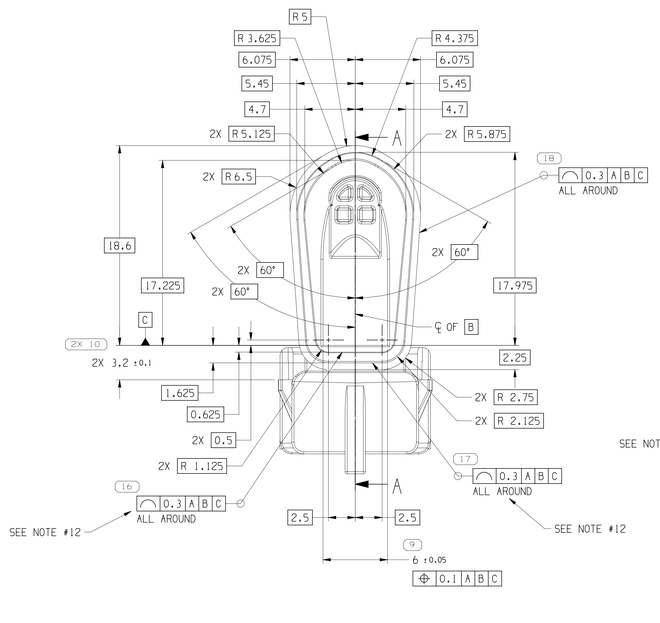

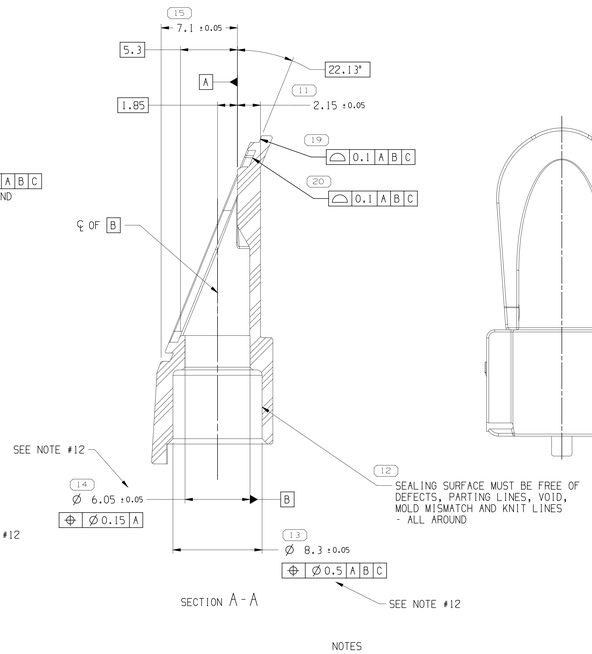

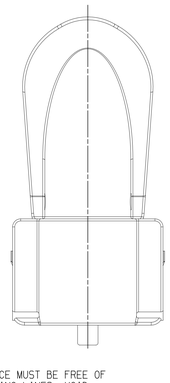

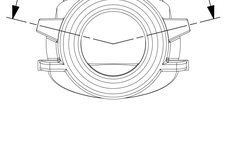

NOTES

1. UNLESS OTHERWISE SPECIFIED AND/OR INDICATED:

   DIMENSIONS ARE TO FACE OF VIEW SHOWN AND AUTOMATICALLY ROUNDED BY COMPUTER FOR INSPECTION (SEE MATH MODEL FOR PRECISE DIMENSIONS). FOR ALL OTHER DIMENSIONS NOT SHOWN BUT REQUIRED FOR TOOL BUILD, SEE MATH MODEL FOR PRECISE TOOL PATH DATA.

2. THIS PART USED IN ASSEMBLIES SHOWN ON TAXI 35339727.

3. REFERENCE MATING COMPONENTS OR EQUIVALENT:

   COVER HOUSING - 35262338.

4. THIS PART ACCEPTS THE FOLLOWING COMPONENTS OR EQUIVALENT:

   TERMINAL ASM KIT - 35010758
   MAX INSULATION CRIMP (ICD) MUST BE LESS THAN Ø5.9 MM.
   CABLE SEAL - 33359659
   SEAL RETAINER - 33358010.

5. MATERIAL MUST BE M6354002 FOR LASER WELD APPLICATION

6. NO REGRIND IS PERMISSIBLE FOR THIS APPLICATION

7. THIS PRODUCT IS NOT CATEGORIZED AS AN APPEARANCE ITEM, MINOR IMPERFECTIONS INCLUDING, BUT NOT LIMITED TO, FLOW MARKS, COLOR BLEMISHES, GATE VESTIGE, AND SOFT FLASH THAT DO NOT AFFECT THE FIT, FORM, OR FUNCTION OF THE PART ARE PERMISSIBLE PER EANP_4-3_CS_01_EN.

8. CORPORATE BRAND TO BE APPLIED TO PRODUCT DESIGN PER THE LATEST REVISION OF ESD S1085201.

9. FINAL LASER WELDED ASSEMBLY MUST PASS THE 1.0 SCCM LEAK RATE PER ES-A-755

10. FINAL LASER WELDED ASSEMBLY MUST PASS 90N PULL TEST

11. GENERAL MAXIMUM FLASH ALLOWED 0.25mm

12. MAXIMUM FLASH ALLOWED ON THIS SURFACE IS 0.1mm

13. LASER WELDING PROCESS OF UPPER TO LOWER HOUSING MUST YIELD TOTAL COLLAPSE OF 0.15mm - 0.23mm (0.006" - 0.009")

(14) PROCESS SENSITIVE DIMENSION

DIMENSIONS ENCLOSED IN ( ) INDICATE REFERENCE DIMENSIONS AND NO TOLERANCE LIMITS ARE ESTABLISHED

DIMENSIONAL RANGE (MM)										CHART E1
FROM	> 0	> 20	> 30	> 70	>100	>150	>200	>250	>300	
TO	20	30	70	100	150	200	250	300	400	
TOLERANCE UNLESS OTHERWISE SPECIFIED										
	±0.15	±0.2	±0.3	±0.4	±0.5	±0.6	±0.8	±1	±1.2	
ANGULAR TOLERANCE ±2°										

A LINE DRAWN THROUGH A PART NUMBER INDICATES THAT PHYSICAL PARTS ARE NOT AVAILABLE FOR ORDERING.

PART NUMBERS THAT DO NOT HAVE A LINE PRESENT INDICATE THAT PHYSICAL PARTS ARE AVAILABLE FOR ORDERING.

CONTACT APTIV SALES TO ASSURE AVAILABILITY OF PARTS.

DWG TYPE: PART DRAWING

STYLE

VOLUME (CM³): 0.839

DISTR CODE

UNLESS OTHERWISE SPECIFIED
THIS DOCUMENT IS IN ACCORDANCE WITH ASME Y14.5-2009. SEE APTIV ENGINEERING DESIGN STANDARD B6-2017 FOR ISO 110012004 RECONCILIATION REQUIREMENTS.

ALL DIMENSIONS ARE IN MILLIMETERS

REFERENCE

THIRD ANGLE PROJECTION

DO NOT SCALE
USE MATH DATA

NX

•APTIV•

CONNECTION SYSTEMS
WARREN, OH

COPYRIGHT 2019 APTIV. ALL RIGHTS RESERVED.

THIS DRAWING IS THE PROPERTY OF APTIV AND CONTAINS APTIV CONFIDENTIAL INFORMATION. THE REPRODUCTION, DISTRIBUTION AND UTILIZATION OF THIS DOCUMENT OR ITS RELATED CAD MATH DATA, AS WELL AS COMMUNICATION OF ANY CONTENT TO OTHERS, WITHOUT EXPRESS AUTHORIZATION, IS PROHIBITED.

		DATE
DR		
APVD1	ADAM WOLFGANG	10AP19
APVD2	ADAM WOLFGANG	10AP19
APVD3	MATTHEW L. PENN	10AP19
APVD4		
APVD5		

SUBSTANCES OF CONCERN AND RECYCLED CONTENT PER APTIV 10949001

MATERIAL: POLYESTER COMPOUND BLK

DRAWING NAME: COV CONN

DRAWING NUMBER: 35262329

SIZE	SCALE	FRAME NO	SHEET NO	STG	REV	N/P
A0	5:1	1 OF 1	1 OF 1	R	01	AD

User: CEA14
Date: 05-Mar-21 Time: 13:07:44
Doc: 35262329 (1)(01).SLDDRW
Sheet: 1 Size: A0 Scale: 5:1