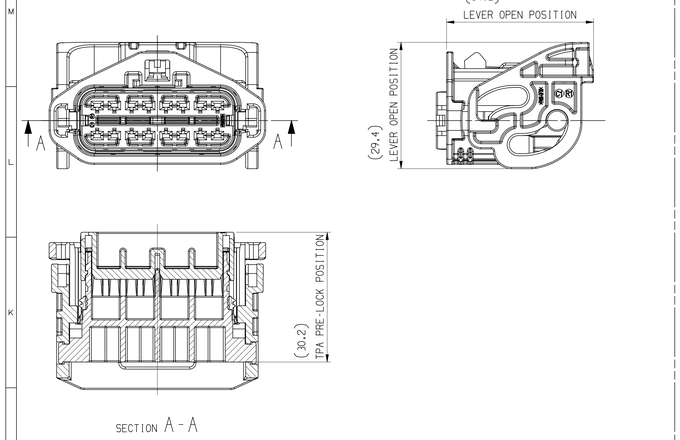

LEVER OPEN AND TPA PRE-LOCK POSITION

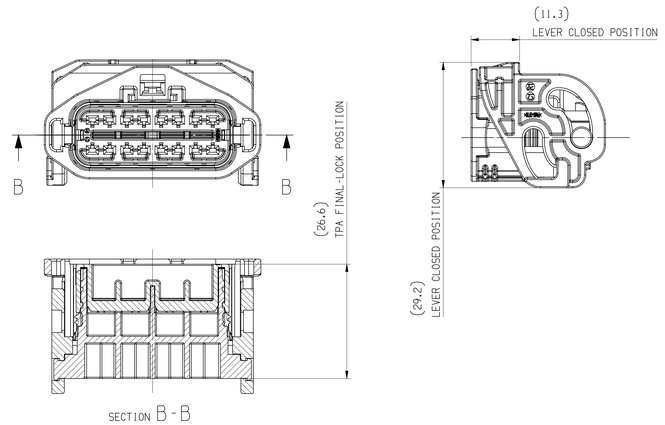

LEVER CLOSED AND TPA FINAL LOCK POSITION

SYMBOL DEFINITION

A DIMENSION WITHOUT AN INSPECTION REPORT SYMBOL ⬭ DOES NOT REQUIRE INSPECTION. IT MAY BE CONTROLLED ON THE INDIVIDUAL COMPONENT DRAWING.

TOTAL NO OF INSPECTIONS REQUIRED	22
LAST NO. USED	18

MISSING SYMBOLS

NO MISSING SYMBOL NUMBER

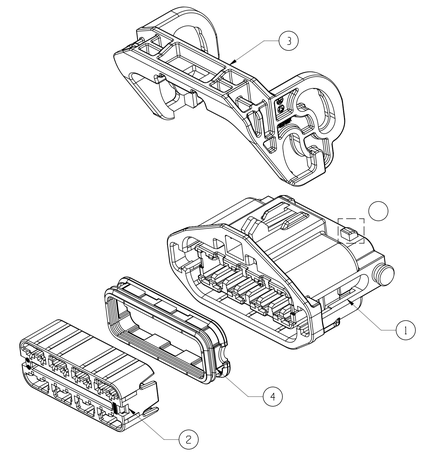

EXPLODED VIEW

DWG STATUS

DATE	STG	REV	N/P	CHG	ZONE	REVISION HISTORY	AUTH	DR	APVD1	APVD2
19JL17	R	01	-	-		INITIAL RELEASE	-	KBK	SJW	PJH
19AU19	R	02	-	-		LEVER COLOR AND PART NUMBER CHANGED ADDED DRESS COVER PART NUMBER TERMINAL INFORMATION CHART CHANGED	444283	SSH	SJW	PJH
25JN20	R	03	-	-	K5	COVER LOCK STRUCTURE WAS UPDATED	206240	SSH	SJW	PJH

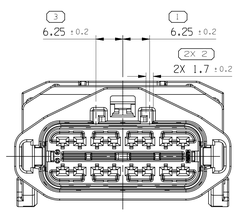

CODE A

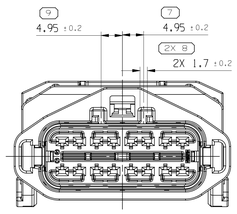

CODE B

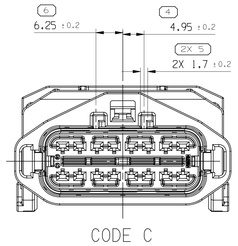

CODE C

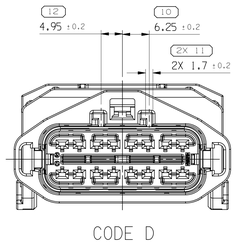

CODE D

CODING OPTIONS

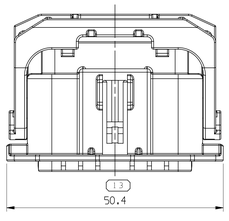

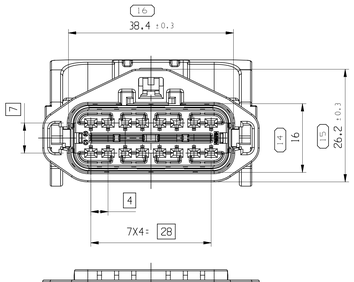

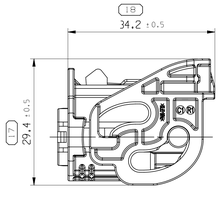

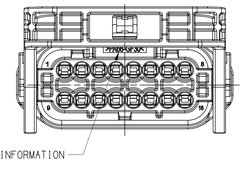

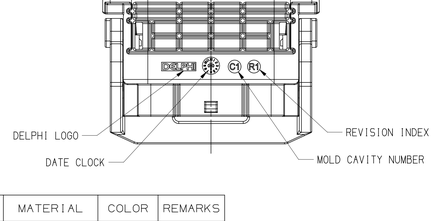

TERMINAL	PART NO. MVL	PART NO. APTIV	CABLE SIZE (mm²)	PLATING
APEX1.2 SEALED FEMALE TERMINAL	54002006	13806233	0.3-0.5	SN
	54001864	13576990	0.75-1.25	
	F931400	13805375	0.3-0.5	Ag
	F731400	13805376	0.75-1.25	
	54002005	13827658	0.3-0.5	Au
	54001863	13579640	0.75-1.25	

CABLE SEAL

TYPE	PART NUMBER	WIRE SIZE (mm²)	INSULATION(Ø)	MATERIAL	COLOR
DUMMY SEAL	35020635	-	-	SILICONE RUBBER	DARK GRAY
SHORT	33318278	0.3-0.35	1.2-1.6		GRAY
	33318279	0.5-0.85	1.6-1.9		LIGHT GRAY
	33318275	1.0-1.5	1.9-2.4		BLACK

CODING	TYPE	REP.	PART NUMBER	DESCRIPTION	QTY.	MATERIAL	COLOR	REMARKS
A TYPE	ASSEMBLY	-	35110814	APEX 1.2 SEALED FEMALE CONNECTOR CODE A	-	-	-	
	FEMALE HOUSING	1	35110824	APEX 1.2 FEMALE HOUSING CODE A	1	PA66 GF30	BLACK	
	TPA	2	35110832	APEX 1.2 FEMALE TPA	1	PA66 GF30	BLUE	
	LEVER	3	35273160	APEX 1.2 LEVER	1	PA66 GF30	DARK GRAY	
	INTERFACE SEAL	4	35110833	APEX 1.2 INTERFACE SEAL	1	SILICONE RUBBER	RED	
B TYPE	ASSEMBLY	-	35110815	APEX 1.2 SEALED FEMALE CONNECTOR CODE B	-	-	-	
	FEMALE HOUSING	1	35110825	APEX 1.2 FEMALE HOUSING CODE B	1	PA66 GF30	DARK GRAY	
	TPA	2	35110832	APEX 1.2 FEMALE TPA	1	PA66 GF30	BLUE	
	LEVER	3	35110834	APEX 1.2 LEVER	1	PA66 GF30	BLACK	
	INTERFACE SEAL	4	35110833	APEX 1.2 INTERFACE SEAL	1	SILICONE RUBBER	RED	
C TYPE	ASSEMBLY	-	35110816	APEX 1.2 SEALED FEMALE CONNECTOR CODE C	-	-	-	
	FEMALE HOUSING	1	35110826	APEX 1.2 FEMALE HOUSING CODE C	1	PA66 GF30	BROWN	
	TPA	2	35110832	APEX 1.2 FEMALE TPA	1	PA66 GF30	BLUE	
	LEVER	3	35110834	APEX 1.2 LEVER	1	PA66 GF30	BLACK	
	INTERFACE SEAL	4	35110833	APEX 1.2 INTERFACE SEAL	1	SILICONE RUBBER	RED	
D TYPE	ASSEMBLY	-	35110817	APEX 1.2 SEALED FEMALE CONNECTOR CODE D	-	-	-	
	FEMALE HOUSING	1	35110827	APEX 1.2 FEMALE HOUSING CODE D	1	PA66 GF30	LIGHT GRAY	
	TPA	2	35110832	APEX 1.2 FEMALE TPA	1	PA66 GF30	BLUE	
	LEVER	3	35110834	APEX 1.2 LEVER	1	PA66 GF30	BLACK	
	INTERFACE SEAL	4	35110833	APEX 1.2 INTERFACE SEAL	1	SILICONE RUBBER	RED	

DIN ISO 2768	Tolerance Class Medium (m)						
Linear Dimensions except for broken edges	Permissible deviations for basic size range (mm)						
	0.5 *) up to 3	over 3 up to 6	over 6 up to 30	over 30 up to 120	over 120 up to 400	over 400 up to 1000	over 1000 up to 2000
	±0.1	±0.1	±0.2	±0.3	±0.5	±0.8	±1.2
Broken edges (radii, chamfers)	Permissible deviations for basic size range (mm)						
	0.5 *) up to 3		over 3 up to 6			over 6	
	±0.2		±0.5			±1	
	Permissible deviations for ranges of lengths, in mm, of the shorter side of the angle concerned						
Angular dimensions	up to 10	over 10 up to 50	over 50 up to 120		over 120 up to 400		over 400
	±1°	±0° 30'	±0° 20'		±0° 10'		±0° 5'

*) For nominal sizes below 0.5mm, the deviations shall be indicated adjacent to the relevant nominal size(s).

NOTES:

1. TOLERANCE ON DIN ISO 2768 (m)
2. MUST BE FREE OF CRACK , FLOW MARK, FLASH, BURR ETC, THAT AFFECT FUNCTION OF PRODUCT
3. MUST MEET HMC ES91500-00 UNLESS OTHERWISE SPECIFIED TO VENDOR SPECIFICATION
4. REFERENCE MATING COMPONENTS OR EQUIVALENT CONNECTOR : 35110818,35110819,35110820,35110821
5. APPLICABLE DRESS COVER PART NO : 35342506

A LINE DRAWN THROUGH A PART NUMBER INDICATES THAT PHYSICAL PARTS ARE NOT AVAILABLE FOR ORDERING.

PART NUMBERS THAT DO NOT HAVE A LINE PRESENT INDICATE THAT PHYSICAL PARTS ARE AVAILABLE FOR ORDERING.

CONTACT APTIV SALES TO ASSURE AVAILABILITY OF PARTS.

DWG TYPE: PART DRAWING

STYLE

VOLUME (CM³) | DISTR CODE

UNLESS OTHERWISE SPECIFIED
THIS DOCUMENT IS IN ACCORDANCE WITH ASME Y14.5-2009. SEE APTIV ENGINEERING DESIGN STANDARD B6-201 FOR ISO 11012004 RECONCILIATION REQUIREMENTS.

ALL DIMENSIONS ARE IN MILLIMETERS

REFERENCE: OPP-17228402

THIRD ANGLE PROJECTION

DO NOT SCALE
USE MATH DATA

NX

PROCESS SENSITIVE DIMENSION

DIMENSIONS ENCLOSED IN ( ) INDICATE REFERENCE DIMENSIONS AND NO TOLERANCE LIMITS ARE ESTABLISHED

DIMENSIONAL RANGE (MM)																	
FROM	> 0	> 3	> 6	> 30	> 70	>100	>150	>200	>250	>300							
TO	3	6	30	70	100	150	200	250	300	400							
TOLERANCE (MM) UNLESS OTHERWISE SPECIFIED																	
	±0.15	±0.2	±0.3	±0.4	±0.5	±0.6	±0.8	±1	±1.2								
ANGULAR TOLERANCE ±2°																	

APTIV

CONNECTION SYSTEMS
Chennai, India
APTIV. ALL RIGHTS RESERVED.
COPYRIGHT

THIS DRAWING IS THE PROPERTY OF APTIV AND CONTAINS APTIV CONFIDENTIAL INFORMATION. THE REPRODUCTION, DISTRIBUTION AND UTILIZATION OF THIS DOCUMENT OR ITS RELATED CAD MATH DATA, AS WELL AS COMMUNICATION OF ANY CONTENT TO OTHERS, WITHOUT EXPRESS AUTHORIZATION, IS PROHIBITED.

		DATE
DR		
APVD1	KIM,BEOM-KYU	19JL17
APVD2	SEO,JU-WON	19JL17
APVD3	PARK,JOO-HYUN	19JL17
APVD4		
APVD5		

SUBSTANCES OF CONCERN AND RECYCLED CONTENT PER APTIV [09490]

MATERIAL: SEE NOTES

DRAWING NAME: ASM CONN 16 F APEX 1.2 SLD

DRAWING NUMBER: 35110822

SIZE	SCALE	FRAME NO	SHEET NO	STG	REV	N/P
A0	2:1	1 OF 1	1 OF 1	R	03	-

User: D_PG08
Page: 35110822_C(R)14_SD.DWG
Page Size: 841x1189 Dimensions: mm Date: 21-Sep-20 Time: 16:15:38