DESIGNATED CHARACTERISTICS					QCI	KPC
2		LAST NO USED	K OR Q IN SYMBOL INDICATES CHECKPOINT	FIT/FUNCTION	CI	FF
2	0	TOTAL ON DRAWING		SAFETY/COMPLIANCE		SC

KPC NO	QCI NO	TYPE	DESCRIPTION	RATIONALE	ZONE	SH	PTS
1	-	FF	DIM #15	CRITICAL FOR TERMINAL INSERTION AND COMPONENT DETECTION	D9	1	1
2	-	FF	DIM #16	FEATURE FOR ASSEMBLY	D9	1	1

SYMBOL DEFINITION

A DIMENSION WITHOUT AN INSPECTION REPORT SYMBOL DOES NOT REQUIRE INSPECTION. IT MAY BE CONTROLLED ON THE INDIVIDUAL COMPONENT DRAWING.

TOTAL NO OF INSPECTIONS REQUIRED	17
LAST NO. USED	17

MISSING SYMBOLS

NO MISSING SYMBOL NUMBER

DWG STATUS					ZONE	REVISION HISTORY	AUTH	DR	APVD1	APVD2
DATE	STG	REV	N/P	CHG						
22JN26	R	01	-	-		ALL PARTS - WERE ON DWG 15498846 SHT 01, UPDATED DISTR CODE TO "D" AND REDRAWN PART DRAWING	570381	MLR	JAA	YGR

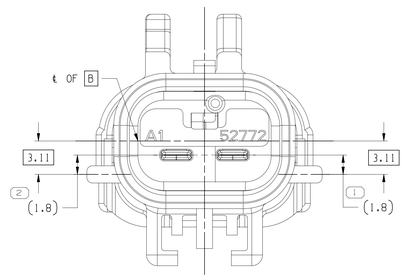

TYPE A

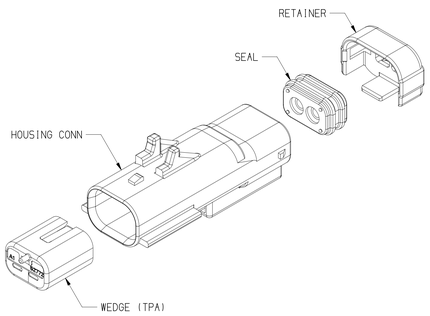

EXPLODED VIEW
SCALE 2:1

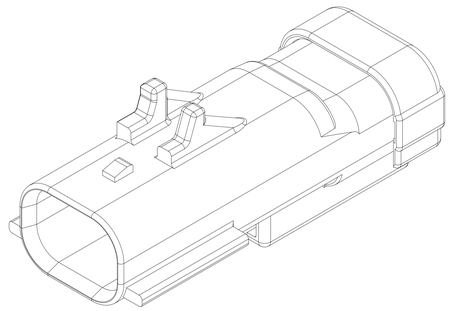

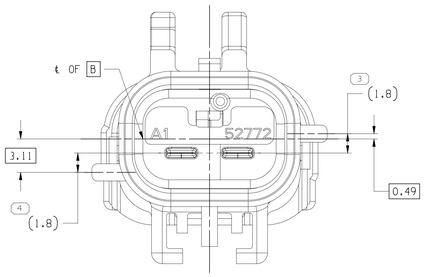

TYPE B
SAME AS TYPE A
EXCEPT AS SHOWN

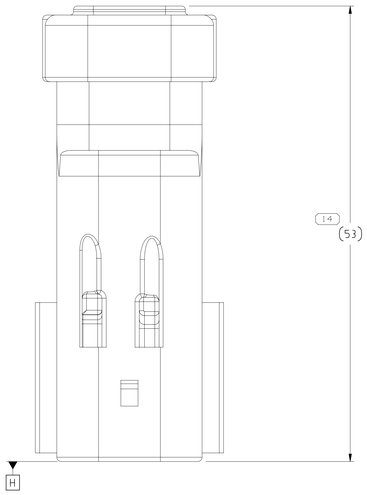

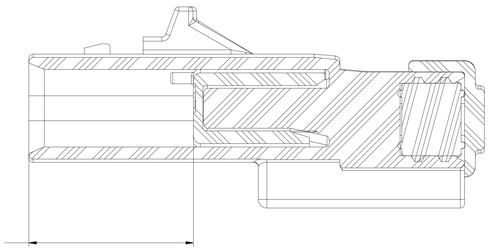

TPA IN FULL STAGE POSITION

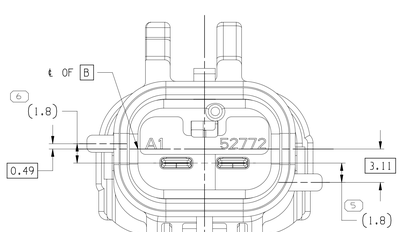

TYPE C
SAME AS TYPE A
EXCEPT AS SHOWN

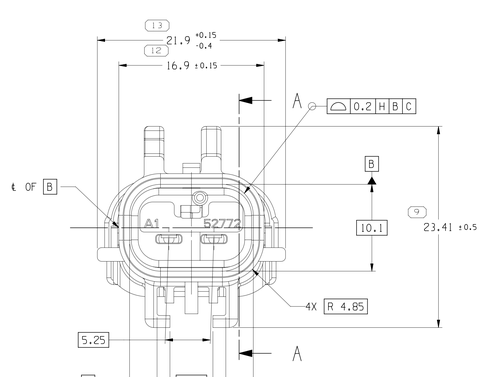

TYPE A

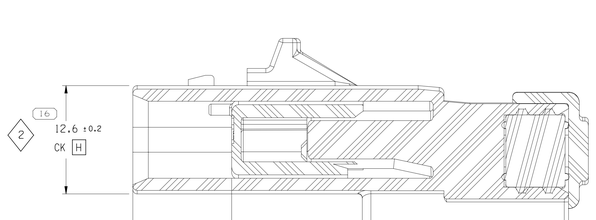

TPA IN PRE-STAGE POSITION

SECTION A - A

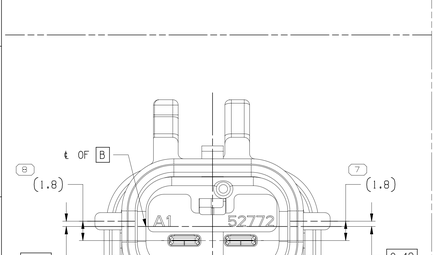

TYPE D
SAME AS TYPE A
EXCEPT AS SHOWN

-	35827288	01	AA	A	T3	-	35827375	54200235	15537421	54200239	15537436	54200234	15537420
F380510	33511328	01	AC	D	T4	54200270	15537458	54200298	15537463	F480510	33516462	54200271	15537460
F280510	33511327	01	AC	C	T4	54200269	15537456	54200298	15537463	F480510	33516462	54200271	15537460
F180510	33511326	01	AC	B	T4	54200268	15537454	54200298	15537463	F480510	33516462	54200271	15537460
54200215	33511325	01	AC	A	T3	54200224	15537303	54200235	15537421	54200241	15537441	54200234	15537420
F080510	33511324	01	AC	A	T4	54200267	15537451	54200298	15537463	F480510	33516462	54200271	15537460
55200205	33500205	01	AC	D	T3	55200207	15537442	54200235	15537421	54200239	15537436	54200234	15537420
55200204	33500204	01	AC	C	T3	55200206	15537440	54200235	15537421	54200239	15537436	54200234	15537420
54200276	33500089	01	AC	D	T4	54200270	15537458	54200298	15537463	54200240	15537437	54200271	15537460
54200275	33500088	01	AC	C	T4	54200269	15537456	54200298	15537463	54200240	15537437	54200271	15537460
54200274	33500087	01	AC	B	T4	54200268	15537454	54200298	15537463	54200240	15537437	54200271	15537460
54200273	33500086	01	AC	A	T4	54200267	15537451	54200298	15537463	54200240	15537437	54200271	15537460
54200233	33500085	01	AC	A	T3	54200232	15537321	54200235	15537421	54200239	15537436	54200234	15537420
54200210	15488574	01	AC	A	T3	54200224	15537303	54200235	15537421	54200239	15537436	54200234	15537420
54200211	10757670	01	AC	B	T3	54200226	15537308	54200235	15537421	54200239	15537436	54200234	15537420
MVL	APTIV PN	REV	N/P	TYPE	TEMPERATURE CLASS	MVL	APTIV PN	MVL	APTIV PN	MVL	APTIV PN	MVL	APTIV PN
ASSEMBLY						HOUSING CONN		WEDGE (TPA)		SEAL		RETAINER	

NOTES

1. UNLESS OTHERWISE SPECIFIED AND/OR INDICATED:
   DIMENSIONS ARE TO FACE OF VIEW SHOWN AND AUTOMATICALLY ROUNDED BY COMPUTER FOR INSPECTION (SEE MATH MODEL FOR PRECISE DIMENSIONS). FOR ALL OTHER DIMENSIONS NOT SHOWN BUT REQUIRED FOR TOOL BUILD, SEE MATH MODEL FOR PRECISE TOOL PATH DATA.
2. CHANGES IN DESIGN COMPOSITION OR PROCESSING FROM THE PART PREVIOUSLY APPROVED FOR PART PRODUCTION REQUIRES PRIOR ENGINEERING APPROVAL
3. A- ASSEMBLIES WITH MVL P/N'S 54200239 / APN 15537436 OR 54200240 / APN 15537437 END SEALS MUST BE USED WITH 20 TO 14AWG OR ISO EQUIVALENTS WIRES WITH INSULATION 1.70 TO 2.77 O.D.
   B- ASSEMBLIES WITH MVL P/N'S 54200241 / APN 15537441 OR F480510 / 33516462 END SEALS MUST BE USED WITH 14 TO 10AWG OR ISO EQUIVALENTS WIRES WITH INSULATION 2.50 TO 4.09 O.D.
4. FOR APPLICATION DATA SEE THE INDIVIDUAL APPLICATION DRAWINGS.
5. THIS PRODUCT IS NOT CATEGORIZED AS AN APPEARANCE ITEM, MINOR IMPERFECTIONS INCLUDING, BUT NOT LIMITED TO, FLOW MARKS, COLOR BLEMISHES, GATE VESTIGE, AND SOFT FLASH THAT DO NOT AFFECT THE FIT, FORM, OR FUNCTION OF THE PART ARE PERMISSIBLE PER EANP_4-3_CS_01_EN.
6. TEST METHOD PER PERFORMANCE SPEC# SAE/USCAR-2 REV.5, CONNECTOR ENGAGE & DISENGAGE WITH FEMALE LATCH DEPRESSED FORCE NOT TO EXCEED 75N FOR THIS SYSTEM

   WEDGE SEATING FORCES - 100N MAX

   X-MAS TREE CLIP INSERTION FORCES - 75N MAX
7. ANNUAL QUALITY REQUIREMENTS:
   IT IS PERMISSIBLE TO PERFORM CONTINUOUS CONFORMANCE PER MVL SPECIFICATION #AQA-001 INSTEAD OF ANNUAL LAYOUT & ANNUAL PV REQUIREMENTS OF QS-9000 SECTION 2 & SAE/USCAR-2 REV.5

   ALL NON-REFERENCE DIMENSIONS ARE REQUIRED

   - USE INDEX A, BLACK SEALED AND UNSEALED FOR ALL AFFECTED INSULATOR CAVITIES

   - CURRENT PRODUCTION TOOLING

   - POINT OF LAST RUN

   SERVICE TOOLING GUIDE INFORMATION PER APEX TRAINING MANUAL
8. MVL P/N'S 54200240 / APN 15537437 AND F480510 / 33516462 BAKED AT 450° F FOR 5 HOURS TO DRIVE OFF VOLITILES
9. ASM CONNECTOR VALIDATED FOR CREEPAGE & CLERANCE FOR 48 VOLTS
10. FOR UNSEALED PART NUMBERS SEE TAXI PN 36031723

DIMENSIONAL RANGE (MM)									CHART E1
FROM	> 0	> 20	> 30	> 70	>100	>150	>200	>250	>300
TO	20	30	70	100	150	200	250	300	400
TOLERANCE UNLESS OTHERWISE SPECIFIED									
	±0.15	±0.2	±0.3	±0.4	±0.5	±0.6	±0.8	±1	±1.2
ANGULAR TOLERANCE ±2°									

A LINE DRAWN THROUGH A PART NUMBER INDICATES THAT PHYSICAL PARTS ARE NOT AVAILABLE FOR ORDERING.

PART NUMBERS THAT DO NOT HAVE A LINE PRESENT INDICATE THAT PHYSICAL PARTS ARE AVAILABLE FOR ORDERING.

CONTACT APTIV SALES TO ASSURE AVAILABILITY OF PARTS.

DWG TYPE: PART DRAWING

STYLE

VOLUME (CM³)

DISTR CODE: D

UNLESS OTHERWISE SPECIFIED
THIS DOCUMENT IS IN ACCORDANCE WITH ASME Y14.5-2009, SEE APTIV ENGINEERING DESIGN STANDARD B6-2017 FOR ISO 11012004 RECONCILIATION REQUIREMENTS.

ALL DIMENSIONS ARE IN MILLIMETERS

REFERENCE: H59010 S

THIRD ANGLE PROJECTION

DO NOT SCALE
USE MATH DATA

NX

•APTIV•

CONNECTION SYSTEMS
WARREN, OH

COPYRIGHT 2026 APTIV. ALL RIGHTS RESERVED.

THIS DRAWING IS THE PROPERTY OF APTIV AND CONTAINS APTIV CONFIDENTIAL INFORMATION. THE REPRODUCTION, DISTRIBUTION AND UTILIZATION OF THIS DOCUMENT OR ITS RELATED CAD MATH DATA, AS WELL AS COMMUNICATION OF ANY CONTENT TO OTHERS, WITHOUT EXPRESS AUTHORIZATION, IS PROHIBITED.

		DATE
DR		
APVD1	S. YUVARAJ	28FE06
APVD2	M. MAJOR	09DEI3
APVD3	J. CAMPBELL	09DEI3
APVD4		
APVD5		

SUBSTANCES OF CONCERN AND RECYCLED CONT 10949001 10949001

MATERIAL: SEE CHART

DRAWING NAME: TAXI CONN 2 M APEX 2.8 SLD

DRAWING NUMBER: 36031464

SIZE	SCALE	FRAME NO	SHEET NO	STG	REV	N/P
A0	4:1	1 OF 1	1 OF 1	R	01	-

User: C74E
Date: 25-Jun-26
Time: 15:24:52
Form: 80234404-02R01-01(01)
Template: 80234404-02R01-01(01)