SYMBOL DEFINITION		
A DIMENSION WITHOUT AN INSPECTION REPORT SYMBOL ( ) DOES NOT REQUIRE INSPECTION. IT MAY BE CONTROLLED ON THE INDIVIDUAL COMPONENT DRAWING.	TOTAL NO OF INSPECTIONS REQUIRED	18
	LAST NO. USED	10

MISSING SYMBOLS

NO MISSING SYMBOL NUMBER

DWG STATUS										
DATE	STG	REV	N/P	CHG	ZONE	REVISION HISTORY	AUTH	DR	APVD 1	APVD 2
19AU16	R	01	-	-		RELEASED PART DRAWING	433824	JGM	JGM	RNL
17MY18	R	01	AA	-		NOT AVAILABLE LINE REMOVED	439890	RNL	RNL	MEA
29JL19	R	01	AB	-		PSD WAS DIM #3	444095	JGO	JSM	JSM

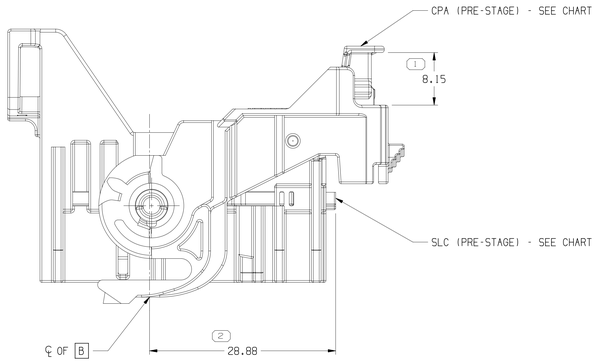

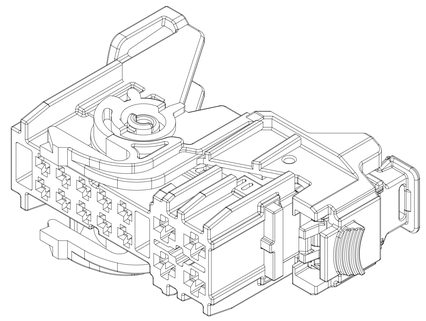

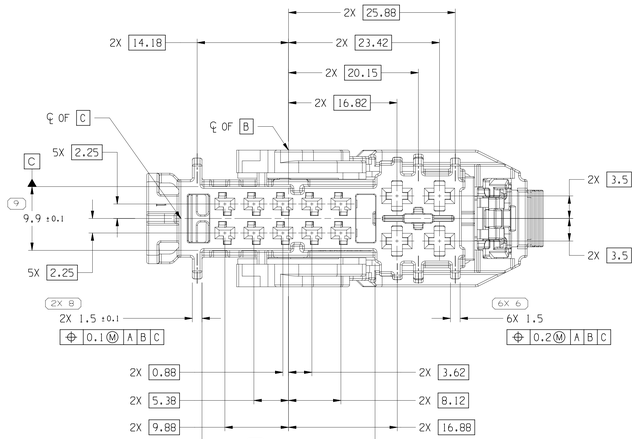

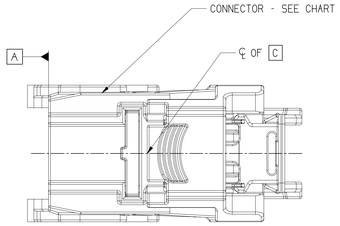

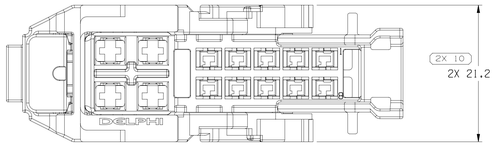

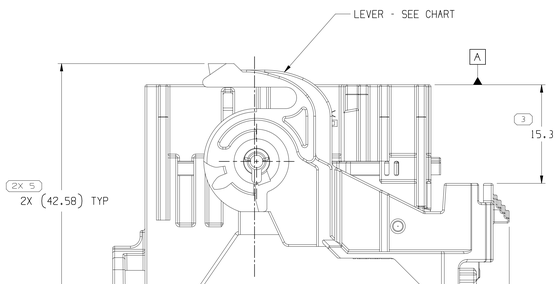

NOTES

1. UNLESS OTHERWISE SPECIFIED AND/OR INDICATED:

   DIMENSIONS ARE TO FACE OF VIEW SHOWN AND AUTOMATICALLY ROUNDED BY COMPUTER FOR INSPECTION (SEE MATH MODEL FOR PRECISE DIMENSIONS). FOR ALL OTHER DIMENSIONS NOT SHOWN BUT REQUIRED FOR TOOL BUILD, SEE MATH MODEL FOR PRECISE TOOL PATH DATA.

2. SEALING CODE O - UNSEALED

3. THIS PRODUCT IS NOT CATEGORIZED AS AN APPEARANCE ITEM, MINOR IMPERFECTIONS INCLUDING, BUT NOT LIMITED TO, FLOW MARKS, COLOR BLEMISHES, GATE VESTIGE, AND SOFT FLASH THAT DO NOT AFFECT THE FIT, FORM, OR FUNCTION OF THE PART ARE PERMISSIBLE PER DPNP-4.7-CS-01.

4. FOR APPLICATION DATA SEE THE APPLICATION DRAWING.

33377074	33377050	33377060	33377053	33377062
PART NO	CONNECTOR	SLC	LEVER	CPA

(10) PROCESS SENSITIVE DIMENSION

DIMENSIONS ENCLOSED IN ( ) INDICATE REFERENCE DIMENSIONS AND NO TOLERANCE LIMITS ARE ESTABLISHED

DIMENSIONAL RANGE (MM)									CHART E1
FROM	> 0	> 20	> 30	> 70	>100	>150	>200	>250	>300
TO	20	30	70	100	150	200	250	300	400
TOLERANCE UNLESS OTHERWISE SPECIFIED									
	±0.15	±0.2	±0.3	±0.4	±0.5	±0.6	±0.8	±1	±1.2
ANGULAR TOLERANCE ±2°									

A LINE DRAWN THROUGH A PART NUMBER INDICATES THAT PHYSICAL PARTS ARE NOT AVAILABLE FOR ORDERING.

PART NUMBERS THAT DO NOT HAVE A LINE PRESENT INDICATE THAT PHYSICAL PARTS ARE AVAILABLE FOR ORDERING.

CONTACT APTIV SALES TO ASSURE AVAILABILITY OF PARTS.

DWG TYPE: PART DRAWING

STYLE

VOLUME (CM³)

DISTR CODE

UNLESS OTHERWISE SPECIFIED

THIS DOCUMENT IS IN ACCORDANCE WITH ASME Y14.5M-1994 AS AMENDED BY THE GM GLOBAL DIMENSIONING AND TOLERANCING ADDENDUM 2001. SEPARATE PATTERNS OF FEATURES MAY BE GAGED SEPARATELY REGARDLESS OF DATUM REFERENCES.

ALL DIMENSIONS ARE IN MILLIMETERS

REFERENCE

THIRD ANGLE PROJECTION

DO NOT SCALE

USE MATH DATA

NX

•APTIV•

CONNECTION SYSTEMS

WARREN, OH

COPYRIGHT 2016 APTIV. ALL RIGHTS RESERVED.

THIS DRAWING IS THE PROPERTY OF APTIV AND CONTAINS APTIV CONFIDENTIAL INFORMATION. THE REPRODUCTION, DISTRIBUTION AND UTILIZATION OF THIS DOCUMENT OR ITS RELATED CAD MATH DATA, AS WELL AS COMMUNICATION OF ANY CONTENT TO OTHERS, WITHOUT EXPRESS AUTHORIZATION, IS PROHIBITED.

		DATE
DR		
APVD1	JESSICA GARCIA M.	19AU16
APVD2	JESSICA GARCIA M.	19AU16
APVD3	R. NARRO	26AU16
APVD4		
APVD5		

SUBSTANCES OF CONCERN AND RECYCLED CONTENT PER APTIV [0949001]

MATERIAL: SEE CHART

DRAWING NAME: ASM CONN 14 F CTS 150 280

DRAWING NUMBER: 33377074

SIZE	SCALE	FRAME NO	SHEET NO	STG	REV	N/P
A0	3:1	1 OF 1	1 OF 1	R	01	AB

User: KALZh
Part: 33377074
Date: 02-Aug-19 Time: 09:22:39
Docket: 0391/01140, 0391/01141, 0391/01142, 0391/01143, 0391/01144, 0391/01145, 0391/01146, 0391/01147, 0391/01148, 0391/01149, 0391/01150, 0391/01151, 0391/01152, 0391/01153, 0391/01154, 0391/01155, 0391/01156, 0391/01157, 0391/01158, 0391/01159, 0391/01160, 0391/01161, 0391/01162, 0391/01163, 0391/01164, 0391/01165, 0391/01166, 0391/01167, 0391/01168, 0391/01169, 0391/01170, 0391/01171, 0391/01172, 0391/01173, 0391/01174, 0391/01175, 0391/01176, 0391/01177, 0391/01178, 0391/01179,