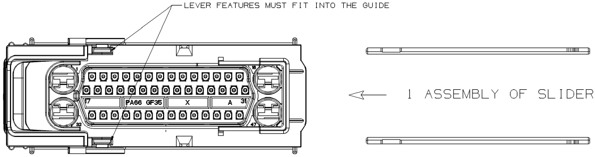

1 ASSEMBLY OF SLIDERS

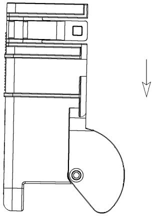

2 ASSEMBLY OF DRESS COVER

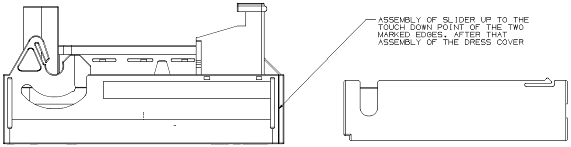

ASSEMBLY OF SLIDER UP TO THE TOUCH DOWN POINT OF THE TWO MARKED EDGES. AFTER THAT ASSEMBLY OF THE DRESS COVER

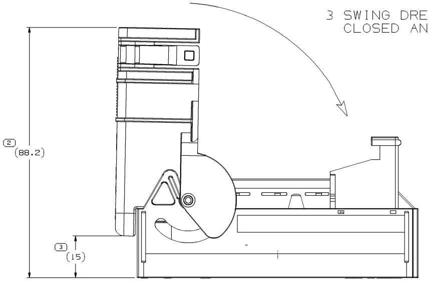

3 SWING DRESS COVER TO FULLY CLOSED AND LOCKED POSITION

POSITION ASSEMBLY VIEWS

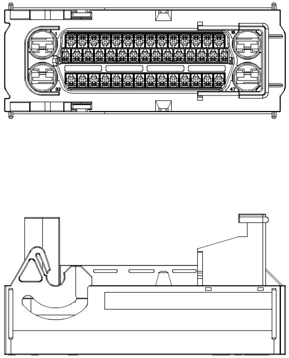

TYPE 101
STRAIGHT EXIT

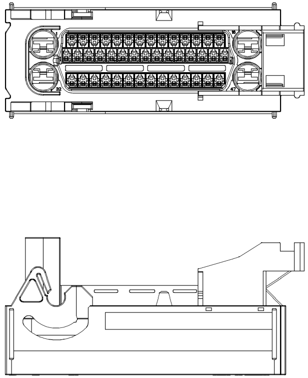

TYPE 103
90° EXIT

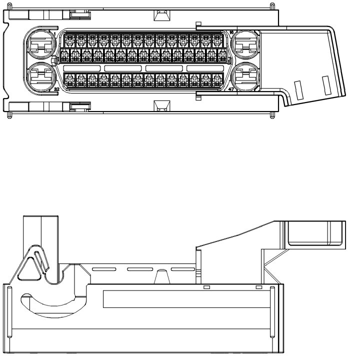

TYPE 102
SIDE EXIT

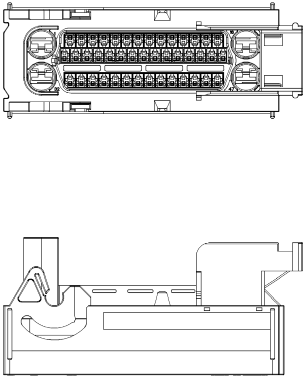

TYPE 104
90° EXIT HIGH WALL

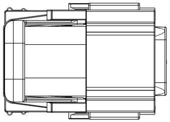

OPTIONAL CONSTRUCTION
FLASH OVER SLIDER OPENINGS
ON THIS END ONLY

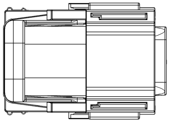

SEAL CATCHES MUST FIT INTO
THE CORRESPONDING RECESSES
OF THE HOUSING

6X LOCKING FEATURES
MUST BE ENGAGED

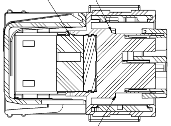

SEAL MUST FIT HERE TO
THE MARKED SURFACE

SECTION A-A

LOCKING FEATURES MUST BE
ENGAGED (ON BOTH SIDES)

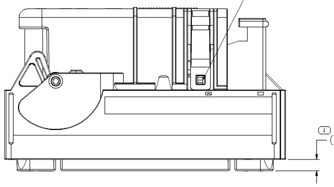

① (4) TPA
PRE-ASSEMBLY POSITION

TYPE 101

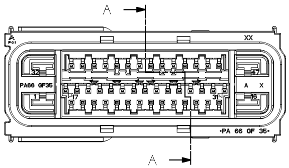

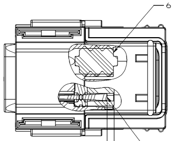

6.35 CAVITY

(2.5)

0.64 PLUG -

AUXILIAR VIEW
CAVITY PLUGS ASSEMBLY
(SHOWN FOR REFERENCE ONLY)

6.35 TERMINAL - SEE "APPLICABLE COMPONENTS" CHART

WIRE SEAL -

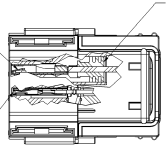

0.64 TERMINAL - SEE "APPLICABLE COMPONENTS" CHART

AUXILIAR VIEW
TPA IN FINAL POSITION WITH TERMINALS
(SHOWN FOR REFERENCE ONLY)

DRAWING NUMBER						
13592618						
SIZE	SCALE	FRAME NO	SHEET NO	STG	REV	N/P
A1×8	2:1	4 OF 4	1 OF 2	R	07	-

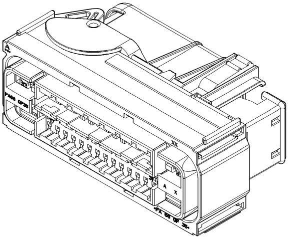

PLUG - SEE "APPLICABLE COMPONENTS" CHART

SEE "APPLICABLE COMPONENTS" CHART

SEE "APPLICABLE COMPONENTS" CHART

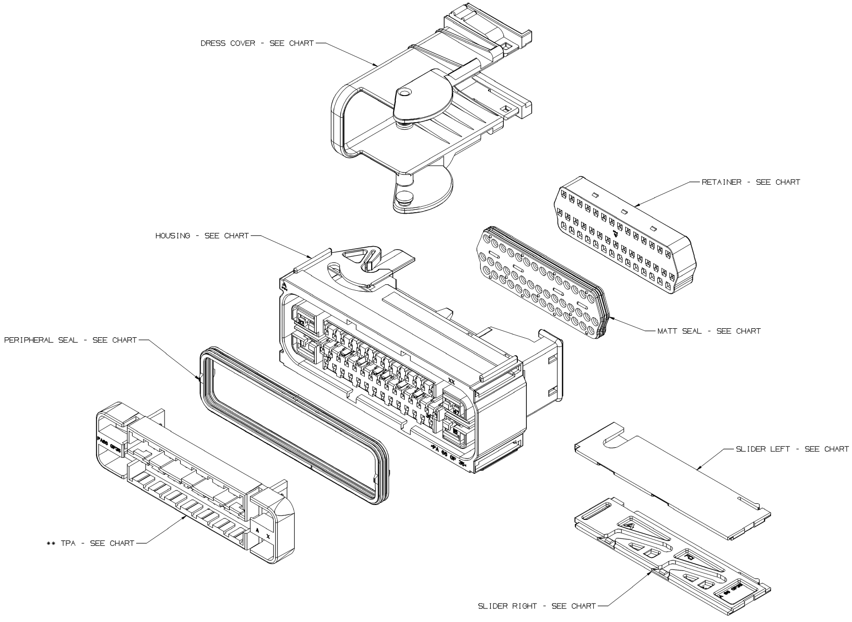

EXPLODED VIEW

13602967	0.64 PLUG	RED	USE FOR OPEN 0.64 TERMINAL CAVITY			
15409763	0.64 FEMALE TERMINAL	TIN	18 - 20 AWG	N/A	N/A	N/A
15425572	6.35 PLUG	GREEN	USE FOR OPEN 6.35 TERMINAL CAVITY			
15405686	WIRE SEAL (LARGE)	BLACK	Ø 3.0 - 3.8	Ø 3.0 - 3.8	Ø 3.0 - 3.8	Ø 3.0 - 3.8
15405685	WIRE SEAL (MEDIUM)	BLUE	Ø 2.1 - 3.0	Ø 2.1 - 3.0	Ø 2.1 - 3.0	Ø 2.1 - 3.0
15416320	WIRE SEAL (SMALL)	RED	Ø 1.4 - 2.3	Ø 1.4 - 2.3	Ø 1,4 - 2,3	Ø 1.4 - 2.3
15405684	6.3 SEALED FEMALE TERMINAL	TIN	12 AWG	4.0mm^2	4.0mm^2	4.0mm^2
15405683	6.3 SEALED FEMALE TERMINAL	TIN	14 AWG	1.5 - 2.5mm^2	1.5 - 2.5mm^2	1.5 - 2.5mm^2
15416321	6.3 SEALED FEMALE TERMINAL	TIN	16 - 20 AWG	0.5 - 1.0mm^2	0.5 - 1.0mm^2	0.5 - 1.0mm^2
PART NO	DESCRIPTION	COLOR/ PLATING	ESB-MIL-123-A	WSS-M22P7-A3 (WK, 125° C)	WSK-MIL124-A (WA, 105° C)	S97GG-14401-AA (WK, 150° C)
DELPHI						
APPLICABLE COMPONENTS			APPLICABLE WIRE SPECIFICATIONS, SIZES AND CAVITY PLUGS			

DRAWING NUMBER
13592618

SIZE	SCALE	FRAME NO	SHEET NO	STG	REV	N/P
A1x8	2:1	3 OF 4	1 OF 2	R	07	-

"X" INDICATES 0.64 PLUGGED CIRCUITS/6.35 CIRCUIT NOS 1, 16, 32 AND 47 ARE PROVIDED OPEN ONLY

NOT INCLUDED (6.35 CIRCUIT)

ASSEMBLY						WIRE DRESS ORIENTATION	HOUSING		DRESS COVER		MATT SEAL		PERIPHERAL SEAL		TPA		SLIDER LEFT		SLIDER RIGHT		RETAINER CAP		NO OF 0.64 CIRCUITS PLUGGED
MVL		DELPHI					MVL	DELPHI	MVL	DELPHI	MVL	DELPHI	MVL	DELPHI	MVL	DELPHI	MVL	DELPHI	MVL	DELPHI	MVL	DELPHI	
PART NO	REV	PART NO	REV	N/P	TYPE																		
54394703	PP	33500646	01	AA	101	STRAIGHT	54394700	15517524	54394702A	15517536	54394710	15517541	80401230	15517543	F613010 ••	15517537	54394728A	15517538	54394729A	15517539	54394751	15517540	31
54394704	PP	15540930	01	AA	101	STRAIGHT																	32
54394705	PP	15540931	01	AA	101	STRAIGHT																	31
54394706	PP	15517628	01	AA	101	STRAIGHT																	32
54394707	PP	15540933	01	AA	101	STRAIGHT																	32
54394708	PP	15540934	01	AA	102	SIDE	54394730	15517534															30
54394709	PP	13592614	02	AA	101	STRAIGHT	54394700	15517524															32
54394712	PP	15539034	01	AA	102	SIDE	54394730	15517534															27
54394715	PP	15540936	01	AA	102	SIDE																	29
54394716	PP	15540953	01	AA	102	SIDE																	16
54394711	PP	15540935	01	AA	101	STRAIGHT	54394700	15517524															31
54394731	PP	15540954	01	AA	102	SIDE	54394730	15517534															28
54394732	PP	15540959	01	AA	102	SIDE																	18
54394733	PP	13530366	02	AA	103	90°	54394701	33500645															17
54394734	PP	15540960	01	AA	103	90°																	14
54394735	PP	15540961	01	AA	103	90°																	28
54394736	PP	15540962	01	AA	103	90°																	29
54394737	PP	15540963	01	AA	101	STRAIGHT	54394700	15517524															30
54394738	PP	15540964	01	AA	101	STRAIGHT																	25
54394745	PP	15540965	01	AA	101	STRAIGHT																	17
54394748	PP	15540966	01	AA	101	STRAIGHT																	31
54394749	PP	15539049	01	AA	103	90°	54394701	33500645															31
54394750	PP	15540967	01	AA	103	90°																	32
54394752	PP	15540968	01	AA	101	STRAIGHT	54394700	15517524															19
54394754	PP	15540969	01	AA	102	SIDE	54394730	15517534															26
54394755	PP	15540970	01	AA	101	STRAIGHT	54394700	15517524															26
54394757	PP	15540972	01	AA	102	SIDE	54394730	15517534															31
54394758	PP	15540974	01	AA	101	STRAIGHT	54394700	15517524															31
54394761	PP	15540976	01	AB	102	SIDE	54394730	15517534													54394760	15529626	0
54394762	PP	15540993	01	AA	101	STRAIGHT	54394700	15517524															0
54394763	PP	15539060	01	AA	103	90°	54394701	33500645															0
54394764	PP	15540994	01	AA	103	90°															54394751	15517540	15
54394767	PP	15540995	01	AA	101	STRAIGHT	54394700	15517524															25
54394769	PP	15540996	01	AA	103	90°	54394701	33500645															26
54394771	PP	15540998	01	AA	103	90°																	30
54394773	PP	15517615	01	AA	101	STRAIGHT	54394700	15517524															28
54394780	PP	15517644	01	AA	102	SIDE	54394730	15517534															28
54394775	PP	15517616	01	AA	101	STRAIGHT	54394700	15517524															32
54394781	PP	15517646	01	AB	102	SIDE	54394730	15517534															32
54394777	PP	15540999	01	AA	103	90°	54394701	33500645															29
54394779	PP	15517634	01	AA	103	90°																	28
54394783	PP	15539901	01	AA	103	90°																	13
54394784	PP	15541000	01	AA	102	SIDE	54394730	15517534															25
54394786	PP	13576038	02	AA	101	STRAIGHT	54394700	15517524															31
54394788	PP	13576039	02	AA	101	STRAIGHT																	27
54394789	PP	15541003	01	AA	103	90°	54394701	33500645															25
54394791	PP	15517635	01	AA	103	90°																	27
54394792	PP	15541004	01	AA	103	90°																	28
54394793	PP	15541005	01	AA	103	90°																	9
54394798	PP	13697615	01	AA	102	SIDE	54394730	15517534															27
54394799	PP	13669637	01	AA	101	STRAIGHT	54394700	15517524															27
55394702	PP	15541007	01	AA	103	90°	54394701	33500645															15
55394704	PP	15541008	01	AA	103	90°																	17
55394705	PP	15541009	01	AA	103	90°																	31
55394707	PP	15541010	01	AA	101	STRAIGHT	54394700	15517524															21
55394709	PP	15541011	01	AA	102	SIDE	54394730	15517534															21
55394711	PP	15541012	01	AA	102	SIDE																	21
55394712	PP	15517636	01	AA	103	90°	54394701	33500645															28
55394713	PP	13697461	01	AA	103	90°																	27
55394714	PP	15541031	01	AA	102	SIDE	54394730	15517534															27
55394716	PP	15541032	01	AA	101	STRAIGHT	54394700	15517524															18
55394718	PP	15541033	01	AA	103	90°	54394701	33500645															29
55394719	PP	15541034	01	AA	102	SIDE	54394730	15517534															22
55394720	PP	15541035	01	AA	102	SIDE																	25
55394724	PP	15541036	01	AA	101	STRAIGHT	54394700	15517524															5
55394726	PP	15541037	01	AA	103	90°	54394701	33500645															23
55394728	PP	15541038	01	AA	101	STRAIGHT	54394700	15517524															18
55394729	PP	15541039	01	AA	102	SIDE	54394730	15517534															27
55394731	PP	15541040	01	AA	102	SIDE																	26
55394733	PP	15540879	01	AA	103	90°	54394701	33500645															9
55394734	PP	13652515	01	AA	104	90° HIGH WALL	55394727	15529366															27
55394735	PP	15541041	01	AA	104	90° HIGH WALL																	28
55394736	PP	15541042	01	AA	104	90° HIGH WALL																	27
55394738	PP	13631919	02	AA	101	STRAIGHT	54394700	15517524															26
55394740	PP	15541043	01	AA	103	90°	54394701	33500645															25
55394741	PP	15541044	01	AA	101	STRAIGHT	54394700	15517524															23
55394743	PP	15541045	01	AA	101	STRAIGHT																	6
55394745	RR	15517643	01	AA	103	90°	54394701	33500645															29
55394747	SS	15541046	01	AA	101	STRAIGHT	54394700	15517524															7
55394749	TT	15517630	01	AA	101	STRAIGHT																	25
55394751	TT	15541047	01	AA	103	90°	54394701	33500645															10
55394753	UU	13681451	02	AA	101	STRAIGHT	54394700	15517524															23
55394755	VV	13686751	01	AA	101	STRAIGHT																	24
55394757	VV	15539061	01	AA	103	90°	54394701	33500645															8
55394759	VV	15541048	01	AA	103	90°																	28
F679100	A	15539062	01	AA	103	90°																	9
F879100	A	15517627	01	AA	101	STRAIGHT	54394700	15517524															30
F089100	A	15541053	01	AA	101	STRAIGHT																	27
F289100	A	15517632	01	AA	101	STRAIGHT																	23
F489100	A	15541066	01	AA	101	STRAIGHT																	6
F053200	A	15541051	01	AA	101	STRAIGHT																	17
F704200	A	15541060	01	AA	103	90°	54394701	33500645															15
F746200	A	15517633	01	AA	101	STRAIGHT	54394700	15517524															27
F086200	A	15541052	01	AA	103	90°	54394701	33500645															20
F148200	A	13725627	02	AA	103	90°																	24
F248200	A	15541058	01	AA	101	STRAIGHT	54394700	15517524															27
F421300	A	15541064	01	AA	101	STRAIGHT																	4
F521300	A	15541063	01	AA	101	STRAIGHT																	5
F306300	A	15541059	01	AA	101	STRAIGHT																	20
55394760	A	15517631	01	AA	101	STRAIGHT																	22
F211600	A	15517638	01	AA	103	90°	54394701	33500645															30
F603600	A	15517641	01	AA	103	90°																	30
F638600	A	15517624	01	AA	101	STRAIGHT	54394700	15517524															29
F518400	A	13871968	01	AA	101	STRAIGHT																	26
F861700	A	13818378	01	AA	103	90°	54394701	33500645															22
F446700	A	15541065	01	AA	103	90°																	21
F655700	A	15541061	01	AA	103	90°																	32
F737700	A	13824719	01	AA	103	90°																	21
F508700	A	13821811	01	AA	103	90°																	24
F608700	A	13821812	01	AA	101	STRAIGHT	54394700	15517524															24
F211800	A	15541056	01	AA	103	90°	54394701	33500645															32
F311800	A	15517639	01	AA	103	90°																	25
F605800	A	13833306	01	AA	101	STRAIGHT	54394700	15517524															21
F112900	A	13872334	01	AA	103	90°	54394701	33500645															29
F025900	A	15541049	01	AA	101	STRAIGHT	54394700	15517524															27
F119900	A	15541054	01	AA	101	STRAIGHT																	21
F576010	A	15517640	01	AA	103	90°	54394701	33500645															22
F653110	A	15517626	01	AA	101	STRAIGHT	54394700	15517524															25
F322210	A	13926857	01	AA	103	90°	54394701	33500645															14
F422210	A	15517619	01	AA	101	STRAIGHT	54394700	15517524															19
F522210	A	15517622	01	AA	101	STRAIGHT																	27
F622210	A	13926856	01	AA	101	STRAIGHT																	9
N/A	-	33401295	01	AA	101	STRAIGHT																	19
N/A	-	33201303	01	-	101	STRAIGHT																	21

ALL CIRCUITS OPEN

"X" INDICATES 0.64 PLUGGED CIRCUITS/6.35 CIRCUIT NOS 1, 16, 32 AND 47 ARE PROVIDED OPEN ONLY

DRAWING NUMBER						
13592618						
SIZE	SCALE	FRAME NO	SHEET NO	STG	REV	N/P
A1×8	2:1	2 OF 4	1 OF 2	R	07	-

SYMBOL DEFINITION			MISSING SYMBOLS
A DIMENSION WITHOUT AN INSPECTION REPORT SYMBOL ◯ DOES NOT REQUIRE INSPECTION. IT MAY BE CONTROLLED ON THE INDIVIDUAL COMPONENT DRAWING.	TOTAL NO OF INSPECTIONS REQUIRED	3	NO MISSING SYMBOL NUMBER
	LAST NO. USED	3	

DWG STATUS					ZONE	REVISION HISTORY	AUTH	DR	APVD 1	APVD 2
DATE	STG	REV	N/P	CHG						
04NO14	R	04	-	-		ALL PARTS - CLEARED REV COLUMN & REDRAWN MVL DWG TO PD; 13592614, 13926857, 15517616, 15517630, 15517646, 15539034, 15539049, 15539060-62, 15540879, 15540930-31, 15540933-34, 15540935-36, 15540953-54, 15540960-70, 15540972, 15540976, 15540994-96, 15540998-99, 15541000, 15541003-12, 15541031-49, 15541051-54, 15541056, 15541058-60, 15541063-66, 33500646 - UPDATED PART AVAILABILITY; 33201303 - RELEASED	428021	CGD	CGD	VHG
29JA15	R	05	-	-		15517646 - UPDATED PART AVAILABILITY	428761	VHG	VMR	VHG
12JA17	R	06	-	-		ADDED "SHT 1 OF 2" AND "SEE SHT 2" NOTE	435279	ABH	JVM	VHG
01FE17	R	07	-	-		15540976 - UPDATED PART AVAILABILITY	435587	VHG	ERG	VHG

NOTES

1. UNLESS OTHERWISE SPECIFIED AND/OR INDICATED:

   DIMENSIONS ARE TO FACE OF VIEW SHOWN AND AUTOMATICALLY ROUNDED BY COMPUTER FOR INSPECTION (SEE MATH MODEL FOR PRECISE DIMENSIONS). FOR ALL OTHER DIMENSIONS NOT SHOWN BUT REQUIRED FOR TOOL BUILD, SEE MATH MODEL FOR PRECISE TOOL PATH DATA.

2. THIS PRODUCT IS NOT CATEGORIZED AS AN APPEARANCE ITEM, MINOR IMPERFECTIONS INCLUDING, BUT NOT LIMITED TO, FLOW MARKS, COLOR BLEMISHES, GATE VESTIGE, AND SOFT FLASH THAT DO NOT AFFECT THE FIT, FORM, OR FUNCTION OF THE PART ARE PERMISSIBLE PER DPNP-4.7-CS-01.

3. FOR APPLICATION DATA SEE THE INDIVIDUAL APPLICATION DRAWINGS.

4. ** ASSEMBLY ACCEPT OPTIONAL TPA: MVL 80012953 / DELPHI 33506611.

5. ENGINEERING APPROVAL OF SUPPLIER SAMPLES IS REQUIRED FOR WIRE PRIOR TO AUTHORIZATION OF PART PRODUCTION

6. TPA MUST BE CORRECTLY POSITIONED IN PRE-LOADED STATE FOR TERMINAL INSERTION INTO CAVITIES

7. TPA MUST BE COMPLETELY REMOVED FROM CONNECTOR HOUSING TO SERVICE (REMOVE) A TERMINAL/WIRE ASSEMBLY

8. TESTING: MUST COMPLY WITH ALL APPLICABLE SECTIONS OF SAE/USCAR - 2 REV 3 CLASS 3 WITH THE EXCEPTION OF REQUIREMENT 5.4.1, TERMINAL-CONNECTOR ENGAGE/DISENGAGE FORCE AFTER MOISTURE CONDITIONING, MINIMUM PULL OUT FORCE >= 60N.

9. WIRING FABRICATORS MUST PURCHASE FROM SOURCES SHOWN
   1) MVL AUTOMOTIVE

10. SEE HARNESS DRAWING FOR APPLICABLE TERMINAL PART NUMBERS

11. USED WITH 18 & 20 AWG THIN WALL X-LINK WIRES ON 0.64 (TYCO) TERMINAL PER ESB-M1L-123-A, MS-8288 OR EQUIVALENT

12. USED WITH 20 TO 12 AWG THIN WALL X-LINK WIRES ON 6.35 TERMINAL PER ESB-M1L-123-A, MS-8288 OR EQUIVALENT

13. FOR ACTUAL DRAWING DIMENSIONING REFERED TO SPECIFIC TOLERANCE CHART (DON'T USE E1 CHART)

14. SEE SHEET #2 FOR MORE PART NUMBERS.

SEE NOTE #13

TOLERANCE UNLESS OTHERWISE SPECIFIED:
DECIMAL: ANGULAR ±2°
ONE PLACE ±0.25
TWO PLACE ±0.01

DIMENSIONAL RANGE (MM)									CHART E1
FROM TO	> 0 20	>20 30	> 30 70	> 70 100	>100 150	>150 200	>200 250	>250 300	>300 400
TOLERANCE UNLESS OTHERWISE SPECIFIED									
	±0.15	±0.2	±0.3	±0.4	±0.5	±0.6	±0.8	±1	±1.2
ANGULAR TOLERANCE ±2°									

(1) PROCESS SENSITIVE DIMENSION

DIMENSIONS ENCLOSED IN ( ) INDICATE REFERENCE DIMENSIONS AND NO TOLERANCE LIMITS ARE ESTABLISHED

A LINE DRAWN THROUGH A PART NUMBER INDICATES THAT PHYSICAL PARTS ARE NOT AVAILABLE FOR ORDERING.

PART NUMBERS THAT DO NOT HAVE A LINE PRESENT INDICATE THAT PHYSICAL PARTS ARE AVAILABLE FOR ORDERING.

CONTACT DELPHI SALES TO ASSURE AVAILABILITY OF PARTS.

DWG TYPE: PART DRAWING
STYLE:
VOLUME (CM³):
DISTR CODE: D

UNLESS OTHERWISE SPECIFIED

THIS DOCUMENT IS IN ACCORDANCE WITH ASME Y14.5M-1994 AS AMENDED BY THE GM GLOBAL DIMENSIONING AND TOLERANCING ADDENDUM-2001. SEPARATE PATTERNS OF FEATURES MAY BE GAGED SEPARATELY REGARDLESS OF DATUM REFERENCES.

ALL DIMENSIONS ARE IN MILLIMETERS

REFERENCE: K03000

THIRD ANGLE PROJECTION

DO NOT SCALE

USE MATH DATA

CAD NX

DELPHI

DELPHI PACKARD ELECTRICAL/ELECTRONIC ARCHITECTURE
WARREN, OH

COPYRIGHT 2003 DELPHI CORPORATION AND/OR ITS AFFILIATES.
ALL RIGHTS RESERVED.
REVISED 2017
THIS DRAWING IS THE PROPERTY OF DELPHI CORPORATION AND CONTAINS DELPHI CONFIDENTIAL INFORMATION. THE REPRODUCTION, DISTRIBUTION AND UTILIZATION OF THIS DOCUMENT OR ITS RELATED CAD MATH DATA, AS WELL AS COMMUNICATION OF ANY CONTENT TO OTHERS, WITHOUT EXPRESS AUTHORIZATION, IS PROHIBITED.

		DATE
DR		
APVD1	L CARRER	10JL03
APVD2	SUCHA SIAN	19NO13
APVD3	MATT MAJOR	19NO13
APVD4	BOB CUE	19NO13
APVD5		

SUBSTANCES OF CONCERN AND RECYCLED CONTENT PER DELPHI 10949001

MATERIAL: SEE CHART

DRAWING NAME: TAXI ASM CONN 47 F 0.64 6.3 SLD

DRAWING NUMBER: 13592618

SIZE	SCALE	FRAME NO	SHEET NO	STG	REV	N/P
A1×8	2:1	1 OF 4	1 OF 2	R	07	-

13592618

User: lzy8fw
Part: 13592618-CUS01-S01 Date: 01-Feb-17 Time: 15:21
Message: