SYMBOL DEFINITION			MISSING SYMBOLS
A DIMENSION WITHOUT AN INSPECTION REPORT SYMBOL (▭) DOES NOT REQUIRE INSPECTION. IT MAY BE CONTROLLED ON THE INDIVIDUAL COMPONENT DRAWING.	TOTAL NO OF INSPECTIONS REQUIRED	106	NO MISSING SYMBOL NUMBER
	LAST NO. USED	19	

DWG STATUS					ZONE	REVISION HISTORY	AUTH	DR	APVD 1	APVD 2
DATE	STG	REV	N/P	CHG						
26AU02	R	01	-	-		RELEASED	229871	CJC	CJC	LBW
30SE02	R	01	AA	-		UPDATED DIMENSION QUANTITIES	231374	CJC	CJC	MP
19AP04	R	01	AB	-		15475869 MATING CONNECTOR WAS 15359284	254148	TLD	TLD	MP
21FE07	R	01	AC	-		2X 26.6 +0.21/-0.15 WAS 2X 26.6 ±0.15, 4X 20.5 +0.21/-0.15 WAS 4X 20.5 ± 0.15 AND 45.9 +0.24/-0.15 WAS 45.9 ±0.15	400582	MM	MM	MP
01JN09	R	01	AD	-		UPDATED MAT'L CALLOUT AND REMOVED RECYCLING CODE LOGO	408098	EFJ	JAA	DGL
29NO12	R	01	AE	-		REVISION 01AD WAS 02 FOR AUTH NUMBER 408098; UPDATED MATERIAL SPEC	420599	CBG	CBG	DAB
28JL16	R	01	AF	-		UPDATED PART AVAILABILITY	433805	ABH	ACV	ACV

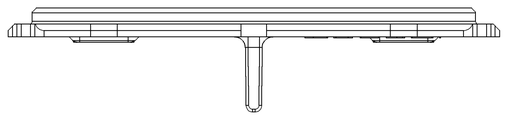

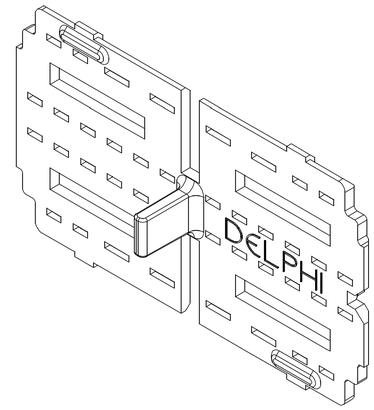

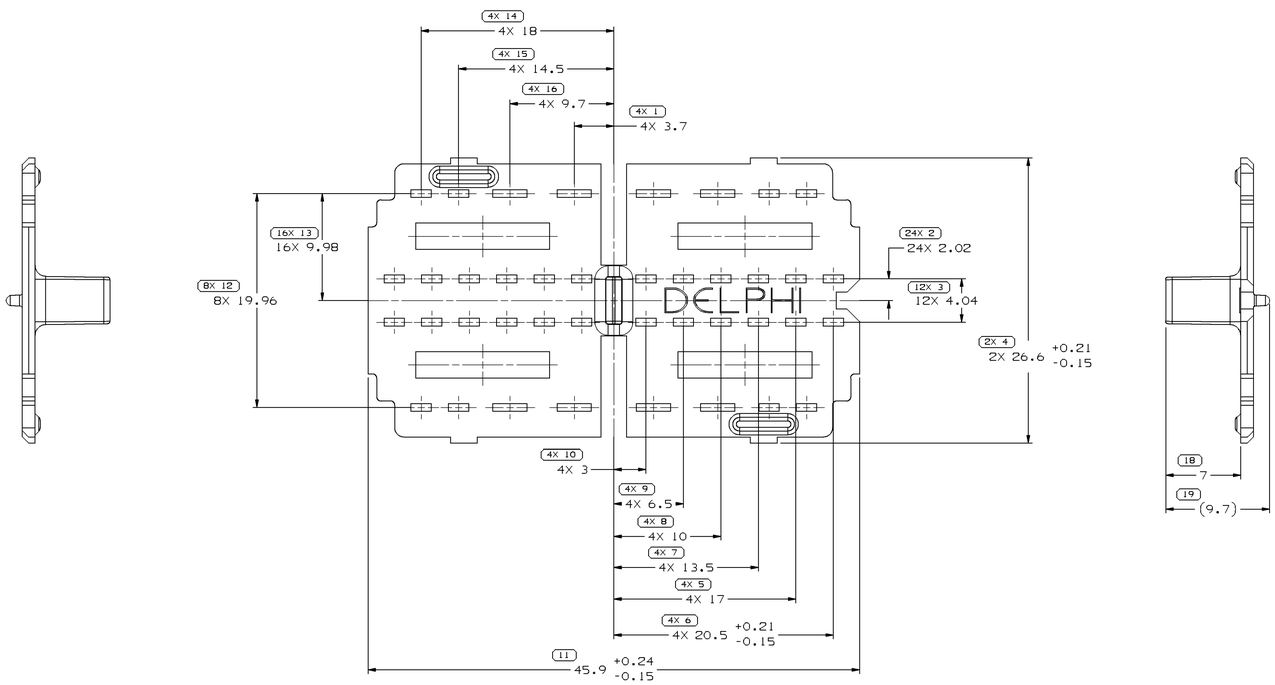

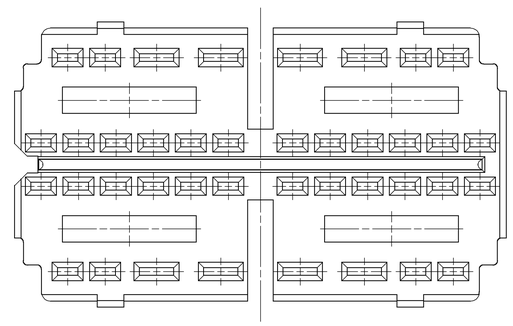

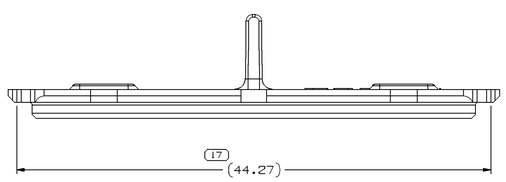

NOTES

1. UNLESS OTHERWISE SPECIFIED AND/OR INDICATED:

   DIMENSIONS ARE TO FACE OF VIEW SHOWN AND AUTOMATICALLY ROUNDED BY COMPUTER FOR INSPECTION (SEE MATH MODEL FOR PRECISE DIMENSIONS). FOR ALL OTHER DIMENSIONS NOT SHOWN BUT REQUIRED FOR TOOL BUILD, SEE MATH MODEL FOR PRECISE TOOL PATH DATA.

2. THIS PRODUCT IS NOT CATEGORIZED AS AN APPEARANCE ITEM, MINOR IMPERFECTIONS INCLUDING, BUT NOT LIMITED TO, FLOW MARKS, COLOR BLEMISHES, GATE VESTIGE, AND SOFT FLASH THAT DO NOT AFFECT THE FIT, FORM, OR FUNCTION OF THE PART ARE PERMISSIBLE PER DPNP-4.7-CS-01.

3. THIS PART IS NOT CONTROLLED FOR AUTOMATIC FEEDING.

4. REFERENCE MATING COMPONENTS OR EQUIVALENT:

   CONNECTOR 15475869

5. (2.3)X(0.1) DELPHI CORPORATE BRAND TO BE LOCATED ON ANY EXTERIOR SURFACE, PREFERABLY VISIBLE AT FINAL ASSEMBLY. OPTIONAL CONSTRUCTION FOR EXISTING TOOLING MAY BE "PED" OR NO LOGO.

6. SLOTS TO ACCEPT GT MALE BLADES.

(11) PROCESS SENSITIVE DIMENSION

DIMENSIONS ENCLOSED IN ( ) INDICATE REFERENCE DIMENSIONS AND NO TOLERANCE LIMITS ARE ESTABLISHED

DIMENSIONAL RANGE (MM)									CHART E1
FROM	> 0	> 20	> 30	> 70	> 100	> 150	> 200	> 250	> 300
TO	20	30	70	100	150	200	250	300	400
TOLERANCE UNLESS OTHERWISE SPECIFIED									
	±0.15	±0.2	±0.3	±0.4	±0.5	±0.6	±0.8	±1	±1.2
ANGULAR TOLERANCE ±2°									

A LINE DRAWN THROUGH A PART NUMBER INDICATES THAT PHYSICAL PARTS ARE NOT AVAILABLE FOR ORDERING.

PART NUMBERS THAT DO NOT HAVE A LINE PRESENT INDICATE THAT PHYSICAL PARTS ARE AVAILABLE FOR ORDERING.

CONTACT DELPHI SALES TO ASSURE AVAILABILITY OF PARTS.

DWG TYPE: PART DRAWING

STYLE:

VOLUME (CUM): 1.139

DISTR CODE:

UNLESS OTHERWISE SPECIFIED

THIS DOCUMENT IS IN ACCORDANCE WITH ASME Y14.5M-1994 AS AMENDED BY THE ON GLOBAL DIMENSIONING AND TOLERANCING ADDENDUM - 1997. ALL GEOMETRIC TOLERANCES ARE TO BE APPLIED AT MMC. ALL DATUMS ARE SIMULATED AND DOES NOT FORM A PRIMARY RELATIONSHIP BETWEEN FEATURES IS ESTABLISHED BY ORIENTATION OR LOCATION TOLERANCES. SEPARATE POSITION CALLOUTS MAY BE ENDED SEPARATELY, REGARDLESS OF DATUM REFERENCE.

ALL DIMENSIONS ARE IN MILLIMETERS

REFERENCE

THIRD ANGLE PROJECTION

DO NOT SCALE

USE MATH DATA

NX

DELPHI

DELPHI PACKARD ELECTRICAL/ELECTRONIC ARCHITECTURE
WARREN, OH

COPYRIGHT 2002 DELPHI CORPORATION AND/OR ITS AFFILIATES.
ALL RIGHTS RESERVED.

THIS DRAWING IS THE PROPERTY OF DELPHI CORPORATION AND CONTAINS DELPHI CONFIDENTIAL INFORMATION. THE REPRODUCTION, DISTRIBUTION AND UTILIZATION OF THIS DOCUMENT OR ITS RELATED CAD MATH DATA, AS WELL AS COMMUNICATION OF ANY CONTENT TO OTHERS, WITHOUT EXPRESS AUTHORIZATION, IS PROHIBITED.

		DATE
DR	CRAIG J. COGGINS	26AU02
APVD1	CRAIG J. COGGINS	26AU02
APVD2	CRAIG J. COGGINS	26AU02
APVD3	LARRY B. WALTERS	26AU02
APVD4		
APVD5		

SUBSTANCES OF CONCERN AND RECYCLED CONTENT PER DELPHI 10949801

MATERIAL: POLYAMIDE COMPOUND BLUE

DRAWING NAME: MOUN STABILIZER

DRAWING NUMBER: 15445756

SIZE	SCALE	FRAME NO	SHEET NO	STG	REV	N/P
A0	5:1	1 OF 1	1 OF 1	R	01	AF

User: c45445
Page: CLD01-S01
Message:

Date: 01-Aug-16 Time: 07:11