SYMBOL DEFINITION			MISSING SYMBOLS
A DIMENSION WITHOUT AN INSPECTION REPORT SYMBOL ( ) DOES NOT REQUIRE INSPECTION. IT MAY BE CONTROLLED ON THE INDIVIDUAL COMPONENT DRAWING.	TOTAL NO OF INSPECTIONS REQUIRED	27	NO MISSING SYMBOL NUMBER
	LAST NO. USED	24	

DWG STATUS					ZONE	REVISION HISTORY	AUTH	DR	APVD 1	APVD 2
DATE	STG	REV	N/P	CHG						
02AP02	R	01	-	-		WAS PE097496 AND RELEASED	223146	FRG	FRG	AK
16AP02	R	01	AA	-		NUT PN WAS 12020097 IN NOTE# 3	223929	RAB	RAB	AK
25JN10	R	01	AB	-		DIM 28.5 +0.5/-0.2 WAS DIM 28.5 +0.5/-0.15	411214	LHT	LHT	LHT
07JL10	R	01	AC	-		DIM 28.5 +0.5/-0.4 WAS 28.5 +0.5/-0.2 AND 14.25 +0.5/-0.2 WAS 14.25 +0.5/-0.15	411317	JEG	EFJ	RRR

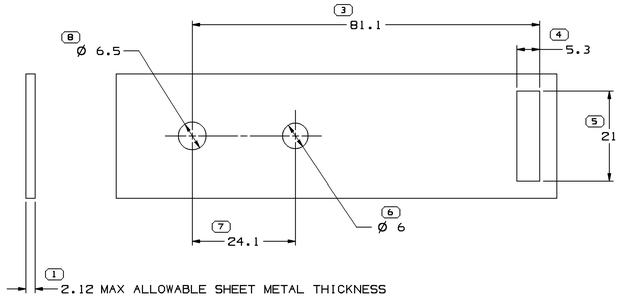

MOUNTING HOLE DETAIL

INSPECTION SYMBOLS SHOWN IN THESE VIEWS ARE FOR REFERENCE ONLY

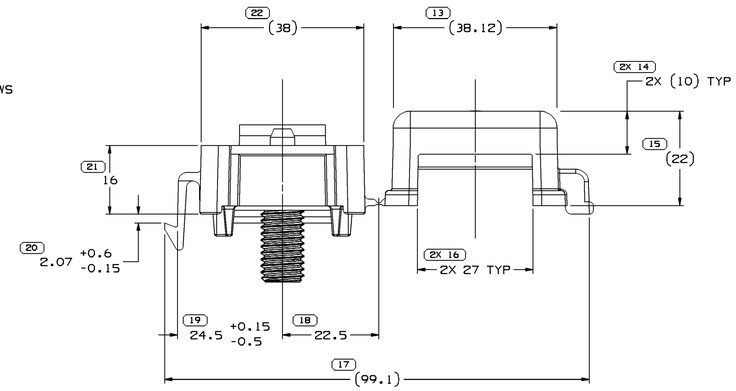

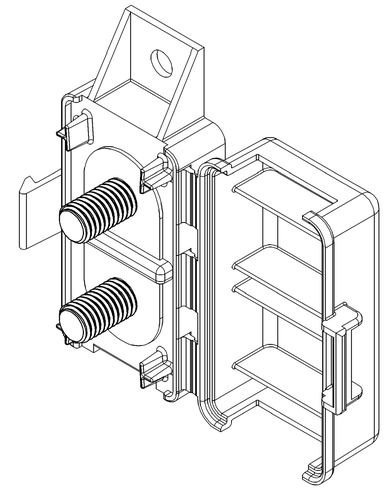

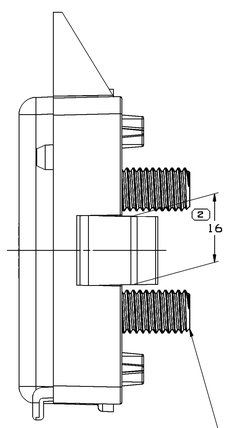

2X 12048212 - BOLT

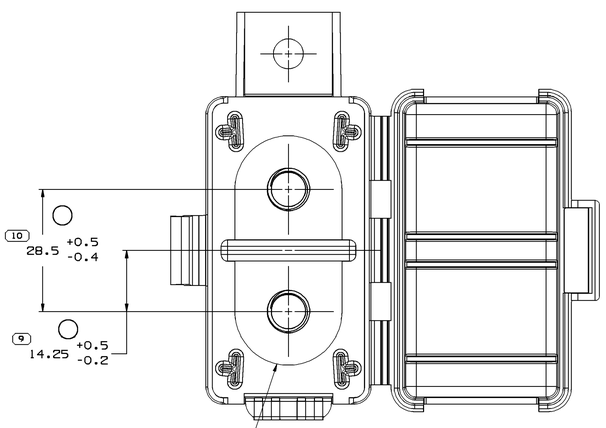

15355513 - BUSS PLATE

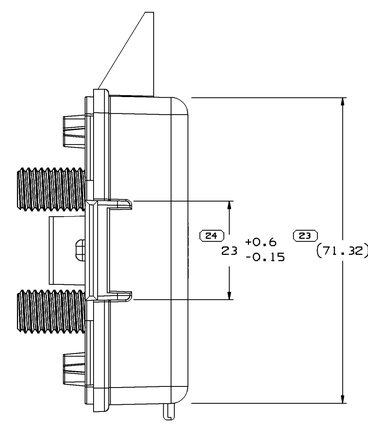

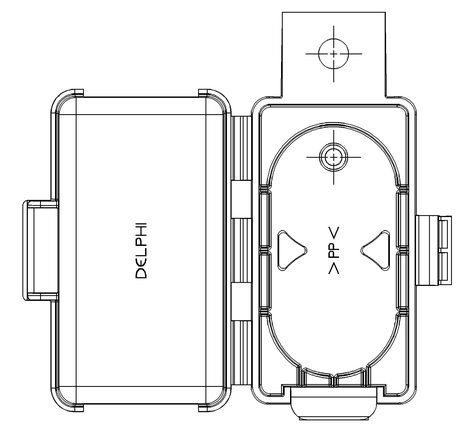

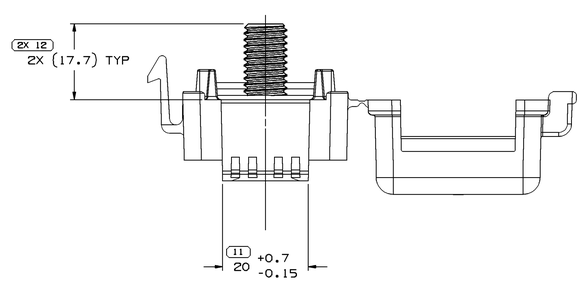

NOTES

1. UNLESS OTHERWISE SPECIFIED AND/OR INDICATED:
   DIMENSIONS ARE TO FACE OF VIEW SHOWN AND AUTOMATICALLY ROUNDED BY COMPUTER FOR INSPECTION. (SEE MATH MODEL FOR PRECISE DIMENSIONS.) FOR ALL OTHER DIMENSIONS NOT SHOWN BUT REQUIRED FOR TOOL BUILD, SEE MATH MODEL FOR PRECISE TOOL PATH DATA.
2. MATERIAL RECYCLING CODE >PP< PER SAE J1344. (2.3)X(0.1) RAISED CHARACTERS AS SHOWN TO BE LOCATED ON ANY EXTERIOR SURFACE. OPTIONAL CONSTRUCTION TO BE NO MATERIAL RECYCLING CODE.
3. MATING COMPONENTS OR EQUIVALENT:
   NUT (2 REQ'D) - 12084536
   TERMINAL - 12146360 (WITH SLEEVE)
   RETAINER - 01605396
4. INSERTS MUST RESIST A TORQUE OF 25 NM WITHOUT STRIPPING OR TURNING IN PLASTIC. (REFERENCE)
5. ALL EXTERIOR SURFACES OF COVER, EXCEPT HINGE AND LOCK, TO BE STIPPLE FINISHED.
6. THIS PART IS NOT CONTROLLED FOR AUTOMATIC FEEDING.
7. EACH STUD CAN ACCEPT A MAXIMUM OF TWO SLEEVED RING TERMINALS IN A FAN ARRANGEMENT.
8. (2.3)X(0.1) RAISED DELPHI CORPORATE BRAND TO BE LOCATED ON ANY EXTERIOR SURFACE, PREFERABLY VISIBLE AT FINAL ASSEMBLY. OPTIONAL CONSTRUCTION TO BE "PED" OR NO LOGO.

DIMENSIONAL RANGE (MM)										CHART E1
FROM	> 0	> 20	> 30	> 70	>100	>150	>200	>250	>300	
TO	20	30	70	100	150	200	250	300	400	
TOLERANCE UNLESS OTHERWISE SPECIFIED										
	±0.15	±0.2	±0.3	±0.4	±0.5	±0.6	±0.8	±1	±1.2	
ANGULAR TOLERANCE ±2°										

IQ PROCESS SENSITIVE DIMENSION

DIMENSIONS ENCLOSED IN ( ) INDICATE REFERENCE DIMENSIONS AND NO TOLERANCE LIMITS ARE ESTABLISHED

DWG TYPE: PART DRAWING

STYLE

VOLUME (CM³) | DISTR CODE

UNLESS OTHERWISE SPECIFIED

THIS DOCUMENT IS IN ACCORDANCE WITH ASME Y14.5M-1994 AS AMENDED BY THE GM GLOBAL DIMENSIONING AND TOLERANCING ADDENDUM - 1997. ALL GEOMETRIC TOLERANCES AND RELATED DATUMS APPLY PER: RULE #1(PERFECT FORM AT MMC) DOES NOT APPLY WHEN RELATIONSHIP BETWEEN FEATURES IS CRITICAL TO FUNCTION. FOR LOCATION TOLERANCES, SEPARATE POSITION CALLOUTS MUST BE GIVEN SEPARATELY, REGARDLESS OF DATUM REFERENCE.

ALL DIMENSIONS ARE IN MILLIMETERS

REFERENCE

THIRD ANGLE PROJECTION

DO NOT SCALE

USE MATH DATA

NX

DELPHI

DELPHI PACKARD ELECTRICAL/ELECTRONIC ARCHITECTURE
WARREN, OH

		DATE
DR		
APVD1	FCO. RESENDIZ	02AP02
APVD2	FCO. RESENDIZ	02AP02
APVD3	ALEX KASEGNE	03AP02
APVD4		
APVD5		

SUBSTANCES OF CONCERN AND RECYCLED CONTENT PER DELPHI-A [094900]

MATERIAL: M2097004 PP IM-RED

DRAWING NAME: ASM CPD FUSE REMOTE ACC

DRAWING NUMBER: 15434718

SIZE	SCALE	FRAME NO	SHEET NO	STG	REV	N/P
A0	2:1	1 OF 1	1 OF 1	R	01	AC

Dwgno: 15434718 Date: 08-Jun-10 Time: 18:19
Dwgsize: A0 Dwgtype: PART Dwgscale: 2:1 Dwgsheet: 1 OF 1