THIS DRAWING AND DESIGN HEREON CONSTITUTES A PROPRIETARY DESIGN OF PACKARD ELECTRIC DIVISION AND IS NOT TO BE DUPLICATED OR RE-PRODUCED WITHOUT AUTHORITY OF PACKARD ELECTRIC DIVISION.

DO NOT SCALE

DATE	SYM	REVISION RECORD	AUTH	DR	CK
01JN98	A	NEW PRODUCT	———	CRS	ASG
20MY99	B	WAS EPC2900002, ADD	990007	TST	ASG
		COVER P/N 10720328			
		POS 4 AND 5 WAS NOT ASM			
20MR00	C	UP DATE REVIEW SYSTEM	000007	TST	POT
30MY03	004	ADD ALTERNATIVE TERM (NOTE2)	-	MWG	POT

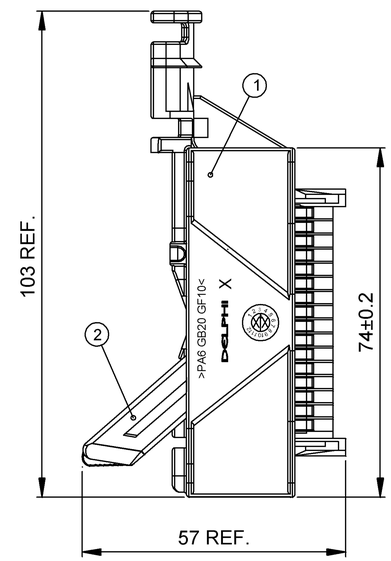

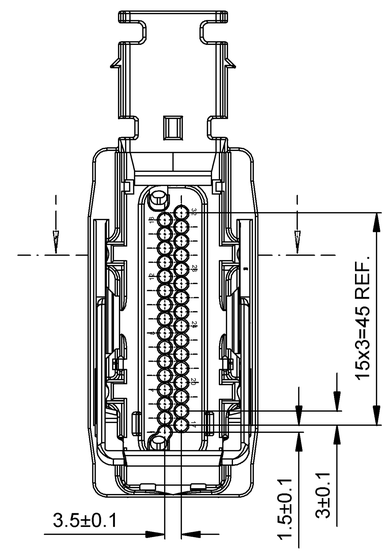

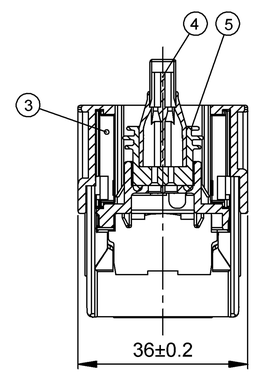

NOTES:

1-MATERIAL:
POS. 1 HOUSING CONN. PA6 GB20 GF10 BLACK
POS. 2 LOCKING CLAMP PA6.6 GF30 BLACK
POS. 3 SLIDER PA6.6 GF30 BLACK/GRAY
POS. 4 CONTACT BRACKET PBT NATURAL
POS. 5 SEAL SILIKON GREEN

2-MATING COMPONENTS OR EQUIVALENTS:
COVER BLACK 10720328 (ID 406124)
RETAINER CLEAR 12129232
CAVITY PLUG 12129557
BOOT ID 629681 (GM 09131652)
TERMINAL 12084912/12084913
ALTERNATIVE TERMINAL 15359001 AND 15359002

3-MATING PART:
CONTROL UNIT-ENGINE (WIRING HARNESS BODY FRONT "J2")

4-DROP VOLTAGE: 1.5mV/A max

5-DIMENSION MARKED REF. ARE FOR REFERENCE ONLY AND NO TOLERANCE LIMITS ARE STABLISHED

6-MARKES:
DATE MARKER, MATERIAL IDENT., SUPPLIER IDENT., TOOL CAVITY AND TERM. CAVITY IDENT. 1 TO 32

Outline Drawing

CAD

CODE Nº 15368391P.dwg

FIRST ANGLE PROJECTION

CODE Nº 6900

QC

DWG DATE 01JN98

METRIC
DIMENSIONS ARE IN MILLIMETERS UNLESS OTHERWISE SPECIFIED

SCALE DO NOT SCALE

DES

REFERENCE Nº SEE NOTE 2

DR TADEU

CK TUDESCHINI

APPR D'UNHÃO

VOL CM3

MATERIAL SPEC SEE NOTE 1

NAME ASM CONN 32F MIC/P 100W
(PLATFORM R4000 J2)

PART NUMBER 15368391

SIZE A3

DELPHI AUTOMOTIVE SYSTEMS
PACKARD ELECTRIC SYSTEMS
JAMBEIRO, SP - BRAZIL