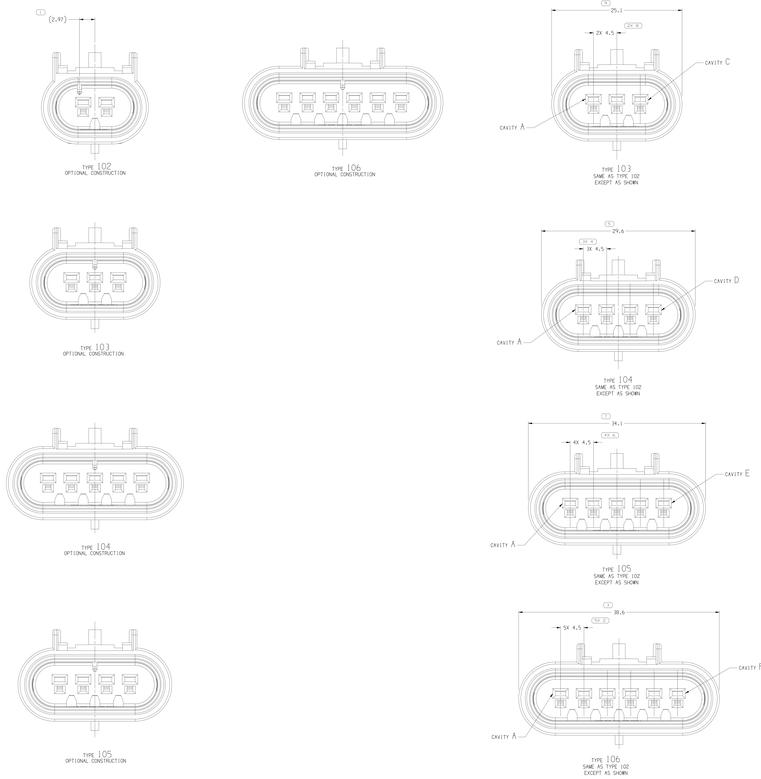

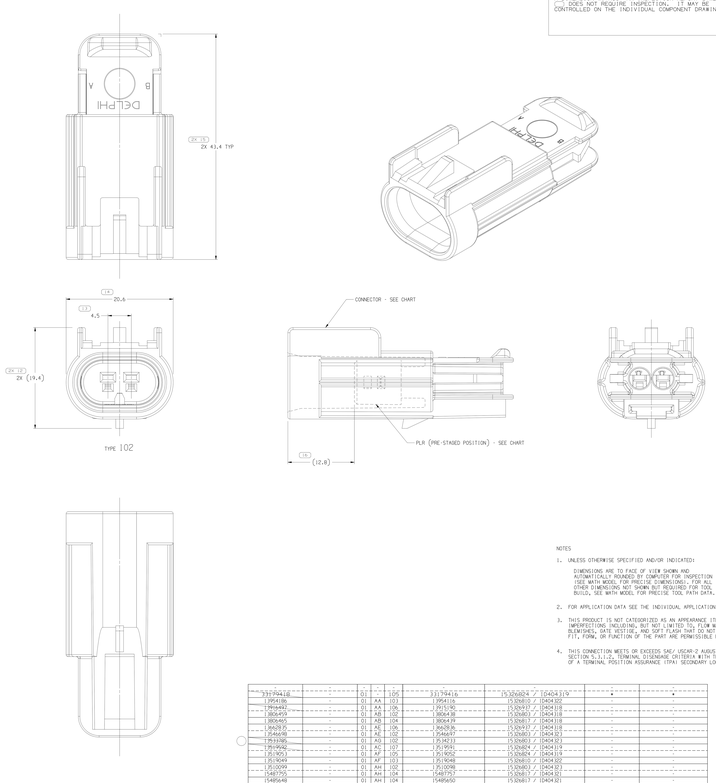

SYMBOL DEFINITION		MISSING SYMBOLS
A DIMENSION WITHOUT AN INSPECTION REPORT SYMBOL DOES NOT REQUIRE INSPECTION. IT MAY BE CONTROLLED ON THE INDIVIDUAL COMPONENT DRAWING.	TOTAL NO. OF INSPECTIONS REQUIRED: 29	17-18
	LAST NO. USED: 18	

DWG STATUS					REVISION HISTORY	ECN	DR	CHK	APP
DATE	STATUS	REV	ECN	ZONE					
04NOV99	R	001	-	-	CLARIFY REVISION COLUMN; ALL PARTS - REVISED GRAPHICS	197500	MC	MC	MC
01JAN00	R	002	-	-	ALL PARTS REVISED, (.04,4) WAS (4,4	198075	AM	AM	MC
27MR00	R	003	-	-	ALL PARTS - REVISED PLR	199420	KB	KB	MC
26APR00	R	004	-	-	ALL PARTS - ADDED 112.81 DIM & REMOVED 35.4 & 39.6 DIMS	199528	EV	EV	MA
29MR01	R	005	-	-	ALL PARTS - REVISED NOTES	206589	KB	KB	MC
29MR01	R	006	-	-	15J9579 - RELEASED	201567	KB	KB	MC
20FEB02	R	007	-	-	ALL PARTS - ADDED TPA MATING PART INFORMATION	220843	EV	EV	AH
11JA04	R	08	-	-	ADDED 154056A8 AND REVISED NOTE 3	249215	BR	BR	LN
11JA04	R	08	-	-	ADDED 1540755	250452	BR	BR	LN
04AP04	R	09	-	-	CORRECTED ASSEMBLIES - 15J3682X,154056A9,154056A10,154075	254724	LL	LL	LN
16AU04	R	10	-	-	ALL PARTS - ADDED CAVITY PLUG NOTE; ADDED PART 15J1029V	257927	RH	RL	LN
01DE04	R	11	-	-	15J2606 - UPDATED PDW ATTRIBUTES	261604	MW	MW	MC
04JA05	R	12	-	-	15J1049, 15J9053 - RELEASED	262679	AD	KD	LN
17FEB05	R	13	-	-	15J9050 - RELEASED	264261	PB	JM	MP
29JA05	R	14	-	-	RELEASED 15J3705	267658	JEB	JEB	LN
18DC05	R	15	-	-	ALL PARTS - ADDED "CONN COLOR" COLUMN TO CHART; UPDATED CONN AND REMOVED MAT'L; CHANGED STATUS TO RESTRICTED AND ADDED "REPLACED BY" PART NUMBER; 15J9592 - OBSOLETE; 15J4648 - RELEASED	271313	CJP	CJP	LN
13FEB6	R	16	-	-	UPDATED PDW ATTRIBUTES	277480	TS	TS	SW
17APR6	R	17	-	-	15J1009 - UPDATED PDW ATTRIBUTES	279594	JBD	AD	SW
04APR7	R	18	-	-	15J2606, 15J3612, 15J3625, 15J3627 & 15J3633 - UPDATED PDW ATTRIBUTES	401052	STS	AN	PP
21AU07	R	19	-	-	1J662835 - RELEASED	402163	EDS	AUD	AF
14SE07	R	20	-	-	ALL PARTS - ADDED APPLICATION DATA NOTE AND REMOVED MATING COMP & ACCEPTED COMP INFORMATION; 1J662836 WAS 15J9575;	402264	MB	MB	KAP
19OC07	R	21	-	-	ALL PARTS - ADDED "PLR" COLUMN TO CHART	402964	DLG	AUD	KAP
27NV08	R	22	-	-	ALL PARTS - ADDED RESTRICTED USAGE COL TO CHART, UPDATED CONN AND REMOVED MAT'L; 15J9579 WAS RESTRICTED - NOW REPLACED BY 15J9579 AND RESTRICTED	407683	STS	PV	PV	MP
14JL09	R	23	-	-	15J2606 - CONNECTOR #4; 15J2605; 15J2603 - CONNECTOR #5; 15J2611; 15J2613 - CONNECTOR #6; 15J2612; 15J2614 - CONNECTOR #7; 15J4648; 154075; 15J1009; 15J1049; 15J9053; 15J9592; 15J3705; 1J662836 & 1J662835 - REVISED GRAPHICS	408216	TBR	TBR	DNP	
17AU09	R	24	-	-	15J2606 - CONNECTOR #4; 15J1009; 15J1049; 15J9053; 15J9592; 15J3705; 15J2613 - CONNECTOR #6; 15J9579;	408658	TBR	JAA	RNP	
03NO09	R	25	-	-	15J2606,15J2603 & 15J2613 - MORE RESTRICTED USAGE AND REMOVED REPLACED PART NUMBER	409355	EDB	DLG	MP	
13FE10	R	26	-	-	1J806459 & 1J806465 RELEASED	409885	MB	MB	MC	MC
28OC11	R	27	-	-	ALL ACTIVE PARTS - ADDED "OSCAR TERMINAL DISENGAGE DIRECTION" NOTE & REMOVED "CONN COLOR" COLUMN;	415868	JRL	JRL	DGL	
19AU11	R	28	-	-	1J914497 - RELEASED	416374	AVY	JAN	JEV	D
02APL12	R	29	-	-	1J954186 - RELEASED	417631	CDD	CDD	MP	
22AU12	R	30	-	-	ALL PARTS: ADDED OPTIONAL CONSTRUCTION	420526	PAL	PAL	MC	
11JA14	R	31	-	-	1J1102132 - RELEASED	424775	APB	DLG	JF	
04FE15	R	32	-	-	1J1794118 - RELEASED	428703	JMB	DRD	JMB	
19JA17	R	33	-	-	1J1102132 - REMOVED FROM TAXI DRAWING; ADDED "INCOMPATIBILITY IS ALREADY PART OF CONNECTOR"; NO REV LEVER ADVANCE REQUIRED	439442	DLG	DLG	DAC	
06APD6	R	34	-	-	15J13795 - OBSOLETE	572921	SDH	JAA	JHL	

NOTES

1. UNLESS OTHERWISE SPECIFIED AND/OR INDICATED:
   DIMENSIONS ARE TO FACE OF VIEW SHOWN AND AUTOMATICALLY ROUNDED BY COMPUTER FOR INSPECTION PURPOSES. ALL DIMENSIONS ARE NOMINAL UNLESS OTHER DIMENSIONS NOT SHOWN BUT REQUIRED FOR TOOL BUILD, SEE MATH MODEL FOR PRECISE TOOL PATH DATA.

2. FOR APPLICATION DATA SEE THE INDIVIDUAL APPLICATION DRAWINGS.

3. THIS PRODUCT IS NOT CATEGORIZED AS AN APPEARANCE ITEM. MINOR IMPERFECTIONS INCLUDING, BUT NOT LIMITED TO, FILM WHIRLS, COLOR BLEMISHES, GATE VESTIGE, AND SOFT FLASH THAT DO NOT AFFECT FIT, FORM, OR FUNCTION OF THE PART ARE PERMISSIBLE PER EWP.4.1.CS.01.EN.

4. THIS CONNECTION MEETS OR EXCEEDS SAE/ USCAR-2 AUGUST 1997, SECTION 5.3.1.2, TERMINAL DISENGAGE CRITERIA WITH THE APPLICATION OF A TERMINAL POSITION ASSURANCE (TPA) SECONDARY LOCK.

PART NO		REV	N/P	TYPE	CONNECTOR	PLR	REPLACED BY	RESTRICTED USAGE
1J1794118	-	01	-	105	1J1794118	15J2602A / 1J404319	-	-
1J954186	-	01	AA	103	1J954186	15J2602A / 1J404302	-	-
1J1914497	-	01	AA	106	1J914496	15J2602A / 1J404318	-	-
1J806459	-	01	AB	102	1J806438	15J2602A / 1J404318	-	-
1J806465	-	01	AB	104	1J806439	15J2602A / 1J404318	-	-
1J662835	-	01	AC	106	1J662836	15J2602A / 1J404318	-	-
1J546698	-	01	AE	102	1J546697	15J2602A / 1J404302	-	-
1J1914980	-	01	AD	102	1J1914231	15J2602A / 1J404302	-	-
1J1914962	-	01	AG	107	1J1914931	15J2602A / 1J404319	-	-
1J1905 1	-	01	AF	105	1J1905 2	15J2602A / 1J404319	-	-
1J1 9049	-	01	AF	103	1J1 9048	15J2602A / 1J404302	-	-
1J1 0099	-	01	AH	102	1J1 0098	15J2602A / 1J404302	-	-
1J487755	-	01	AH	104	1J487757	15J2602A / 1J404302	-	-
1J489648	-	01	AH	104	1J489650	15J2602A / 1J404302	-	-
1J1 9579	-	01	AH	106	1J1 9576	15J2602A / 1J404318	-	-
15J3683 1	(04046)8	03	AJ	106	15J2602 / 1J404304	15J2602A / 1J404319	-	-
15J3682 7	(04046)7	03	AL	105	15J2602A / 1J404305	15J2602A / 1J404319	1J1905 3	RESTRICTED
15J3680 2	(04046)6	03	AP	104	15J2602 / 1J404306	15J2602A / 1J404302	-	-
15J3681 3	(04046)5	03	AL	103	15J2602 / 1J404307	15J2602A / 1J404302	-	-
15J3686 6	(04046)4	03	AP	102	15J2605 / 1J404308	15J2602A / 1J404303	-	-

DRAWING NUMBER			
15326962			
SCALE	SHEET SIZE	SHEET NO	TOTAL NO
A1x4	511	1 OF 1	01 34

DIMENSIONAL TOLERANCES UNLESS OTHERWISE SPECIFIED	
ANGLES ±0.5°	X.XX ±0.25
X.X ±0.1	X.XXX ±0.127
X.XX ±0.25	X.XXXX ±0.0127
X.XXX ±0.127	X.XXXXX ±0.0127
X.XXXX ±0.0127	X.XXXXXX ±0.0127
X.XXXXX ±0.0127	X.XXXXXXX ±0.0127
X.XXXXXX ±0.0127	X.XXXXXXXX ±0.0127
X.XXXXXXX ±0.0127	X.XXXXXXXXX ±0.0127
X.XXXXXXXX ±0.0127	X.XXXXXXXXXX ±0.0127
X.XXXXXXXXX ±0.0127	X.XXXXXXXXXXX ±0.0127
X.XXXXXXXXXX ±0.0127	X.XXXXXXXXXXXX ±0.0127
X.XXXXXXXXXXX ±0.0127	X.XXXXXXXXXXXXX ±0.0127
X.XXXXXXXXXXXX ±0.0127	X.XXXXXXXXXXXXXX ±0.0127
X.XXXXXXXXXXXXX ±0.0127	X.XXXXXXXXXXXXXXX ±0.0127
X.XXXXXXXXXXXXXX ±0.0127	X.XXXXXXXXXXXXXXXX ±0.0127
X.XXXXXXXXXXXXXXX ±0.0127	X.XXXXXXXXXXXXXXXXX ±0.0127
X.XXXXXXXXXXXXXXXX ±0.0127	X.XXXXXXXXXXXXXXXXXX ±0.0127
X.XXXXXXXXXXXXXXXXX ±0.0127	X.XXXXXXXXXXXXXXXXXXX ±0.0127
X.XXXXXXXXXXXXXXXXXX ±0.0127	X.XXXXXXXXXXXXXXXXXXXX ±0.0127
X.XXXXXXXXXXXXXXXXXXX ±0.0127	X.XXXXXXXXXXXXXXXXXXXXX ±0.0127
X.XXXXXXXXXXXXXXXXXXXX ±0.0127	X.XXXXXXXXXXXXXXXXXXXXXX ±0.0127
X.XXXXXXXXXXXXXXXXXXXXX ±0.0127	X.XXXXXXXXXXXXXXXXXXXXXXX ±0.0127
X.XXXXXXXXXXXXXXXXXXXXXX ±0.0127	X.XXXXXXXXXXXXXXXXXXXXXXXX ±0.0127
X.XXXXXXXXXXXXXXXXXXXXXXX ±0.0127	X.XXXXXXXXXXXXXXXXXXXXXXXXX ±0.0127
X.XXXXXXXXXXXXXXXXXXXXXXXX ±0.0127	X.XXXXXXXXXXXXXXXXXXXXXXXXXX ±0.0127
X.XXXXXXXXXXXXXXXXXXXXXXXXX ±0.0127	X.XXXXXXXXXXXXXXXXXXXXXXXXXXX ±0.0127
X.XXXXXXXXXXXXXXXXXXXXXXXXXX ±0.0127	X.XXXXXXXXXXXXXXXXXXXXXXXXXXXX ±0.0127
X.XXXXXXXXXXXXXXXXXXXXXXXXXXX ±0.0127	X.XXXXXXXXXXXXXXXXXXXXXXXXXXXXX ±0.0127
X.XXXXXXXXXXXXXXXXXXXXXXXXXXXX ±0.0127	X.XXXXXXXXXXXXXXXXXXXXXXXXXXXXXX ±0.0127

(*) PRESS SENSITIVE DIMENSION

DIMENSION ENCLOSED IN A RECTANGLE HAS A TOLERANCE OF ±0.127 UNLESS OTHERWISE SPECIFIED

THIRD ANGLE PROJECTION

DO NOT SCALE DRAWING

DO NOT SCALE DRAWING

NX

PROPRIETARY INFORMATION: THIS DRAWING IS THE PROPERTY OF APTIV. IT MAY NOT BE REPRODUCED OR DISCLOSED WITHOUT PRIOR WRITTEN PERMISSION.

THIS DRAWING DESCRIBES PRODUCTS WHICH MAY NOT BE AVAILABLE IN ALL MARKETS. CONTACT APTIV SALES TO ENSURE AVAILABILITY.

DRAWING TYPE	PART DRAWING
SCALE	
DRAWN CHART	CLASS CODE
UNLESS OTHERWISE SPECIFIED	

THIS DRAWING DESCRIBES PRODUCTS WHICH MAY NOT BE AVAILABLE IN ALL MARKETS. CONTACT APTIV SALES TO ENSURE AVAILABILITY. THIS DRAWING CONTAINS PROPRIETARY INFORMATION. NO REPRODUCTION OR DISCLOSURE WITHOUT PRIOR WRITTEN PERMISSION IS PROHIBITED. UNLESS OTHERWISE SPECIFIED: ALL DIMENSIONS ARE IN MILLIMETERS.

DRAWN	Mr. MCCALL	16JUL97
APPDV	Mr. MCCALL	16JUL97
APPDV	Mr. CHUPKA	16JUL97
REVISED		
REVISED		
REVISED		
REVISED		

PROPRIETARY OF CONTENT AND RESTRICTED DISCLOSURE PLEASE SEE NOTICE (OTHERWISE)

SEE DRAWING	
DRAWING TITLE	TAXI ASM CONN W GT 150 SLD
DRAWING NUMBER	15326962
SCALE	A1x4
SHEET SIZE	511
SHEET NO	1 OF 1
TOTAL NO	01 34

APTIV

CONNECTION SYSTEMS
WARREN, OH

COPYRIGHT 1997 APTIV. ALL RIGHTS RESERVED.

THIS DRAWING DESCRIBES PRODUCTS WHICH MAY NOT BE AVAILABLE IN ALL MARKETS. CONTACT APTIV SALES TO ENSURE AVAILABILITY. THIS DRAWING CONTAINS PROPRIETARY INFORMATION. NO REPRODUCTION OR DISCLOSURE WITHOUT PRIOR WRITTEN PERMISSION IS PROHIBITED.

I_3seas