KEY PRODUCT CHARACTERISTICS					
▽ SAFETY/COMPLIANCE		◇ FIT/FUNCTION	TOTAL ON DRAWING		1
Ⓚ S/C CHECKPOINTS		◇ F/F CHECKPOINTS	LAST NO. USED		1
NO & TYPE	DESCRIPTION	RATIONALE		PTS	ZONE
1 FF	WIDTH CONNECTOR				F12

SYMBOL DEFINITION		
A DIMENSION WITHOUT AN INSPECTION REPORT SYMBOL ⬭ DOES NOT REQUIRE INSPECTION. IT MAY BE CONTROLLED ON THE INDIVIDUAL COMPONENT DRAWING.	TOTAL NO OF INSPECTIONS REQUIRED	6
	LAST NO. USED	6

MISSING SYMBOLS
NO MISSING SYMBOL NUMBER

DATE	STG	REV	N/P	CHG	ZONE	REVISION HISTORY	AUTH	DR	APVD 1	APVD 2
03N021	R	01	-	-		ALL PARTS - RELEASED DISTRIBUTABLE PART DRAWING	555675	AHY	JAA	JA
16AP24	R	02	-	-		35838342 - RELEASED	563575	GLG	CGD	DML
26FE26	R	03	-	-		33511306 - OBSOLETE; 33511308-12 - OBSOLETE; 33511314-23 - OBSOLETE; 33500080 & 81 - OBSOLETE	572302	AGC	JAA	ECL

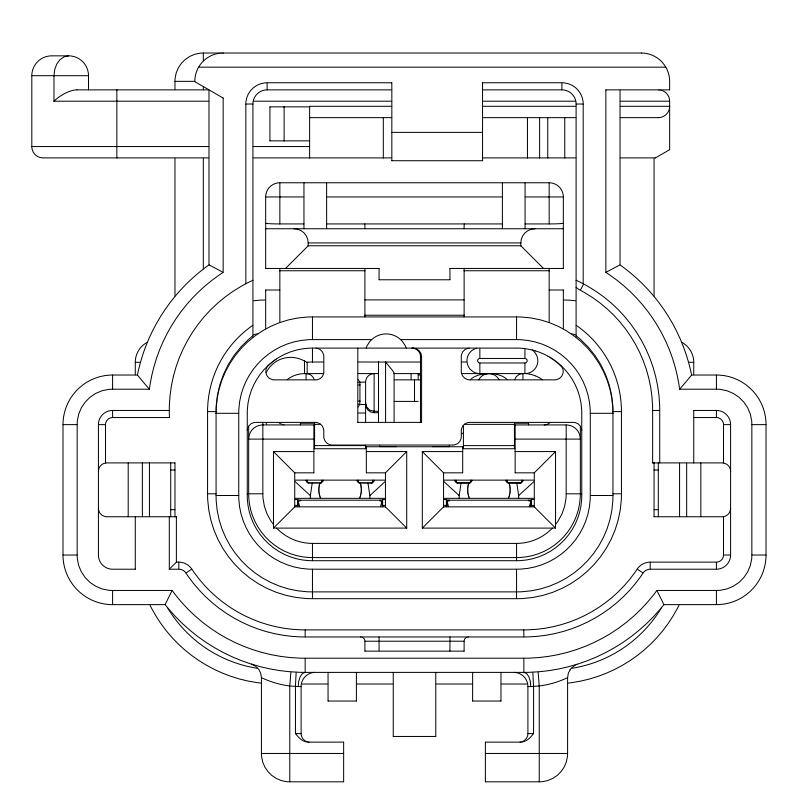

CODE B
SAME AS CODE A
EXCEPT AS SHOWN

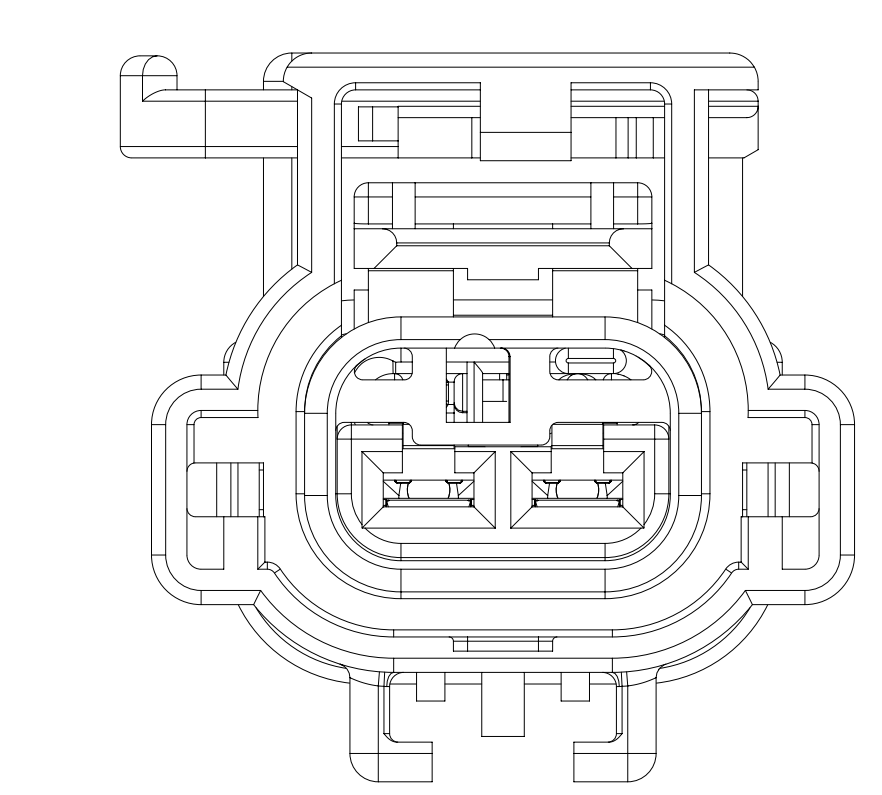

CODE D
SAME AS CODE A
EXCEPT AS SHOWN

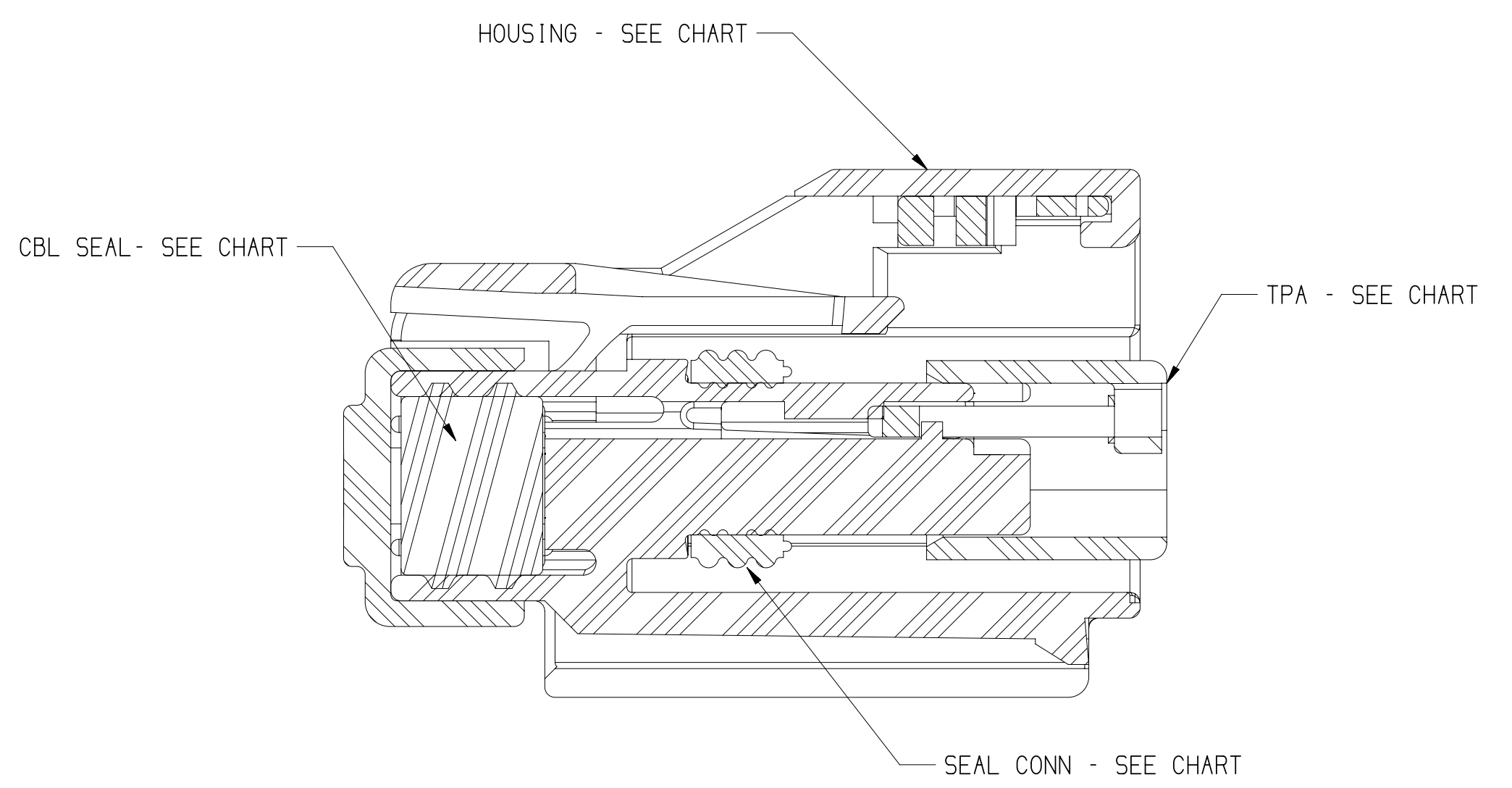

SECTION AAB-AAB

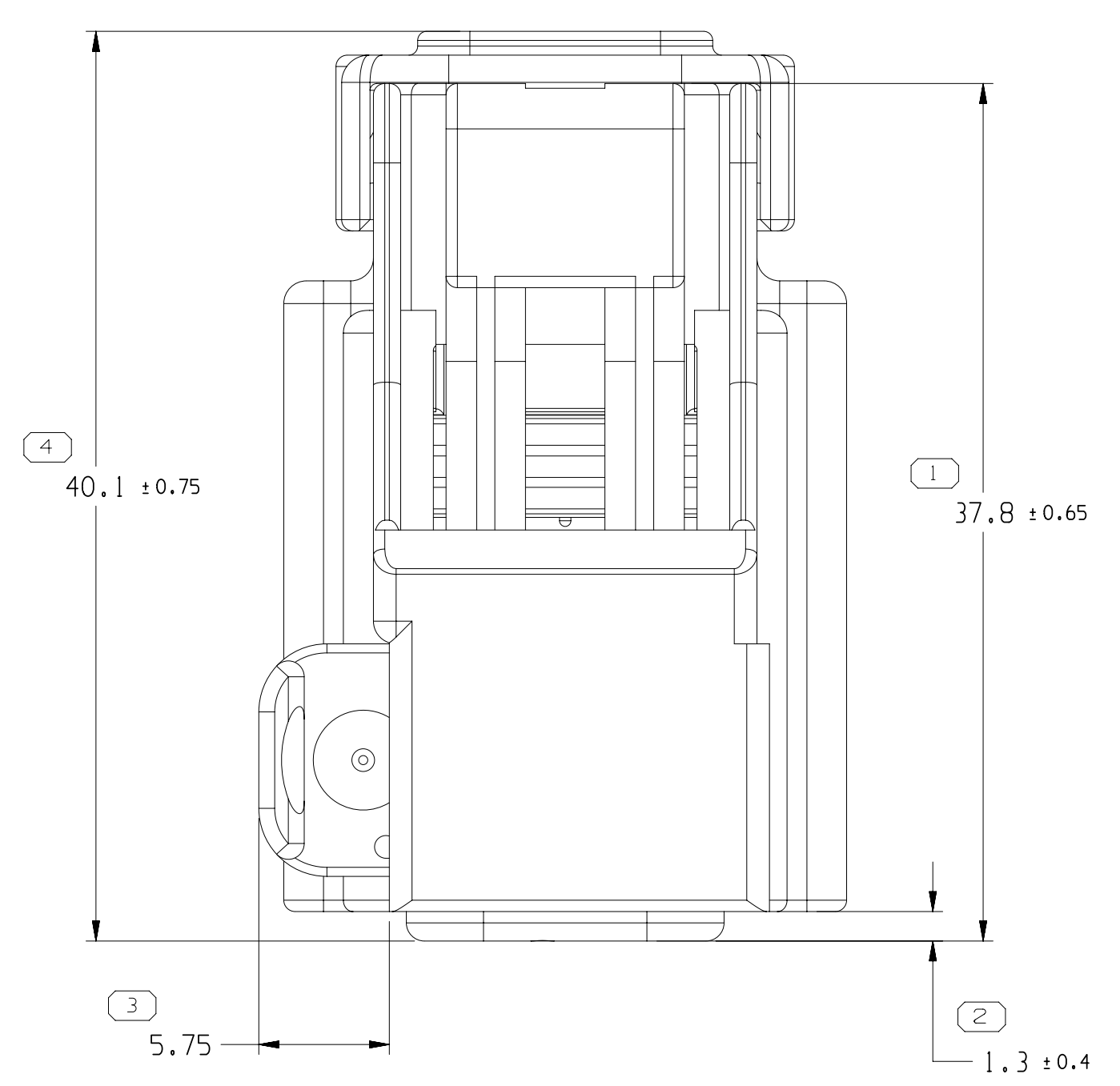

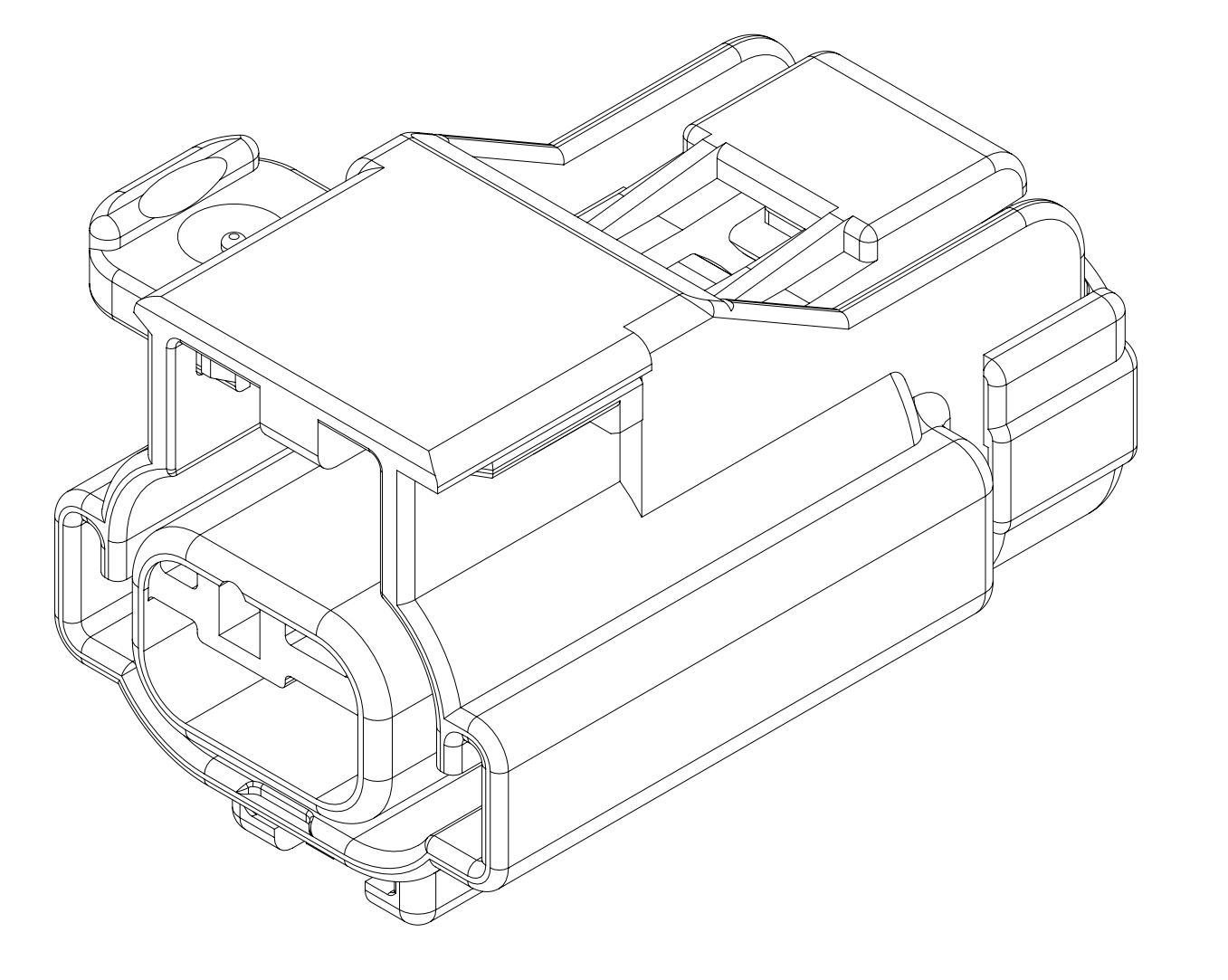

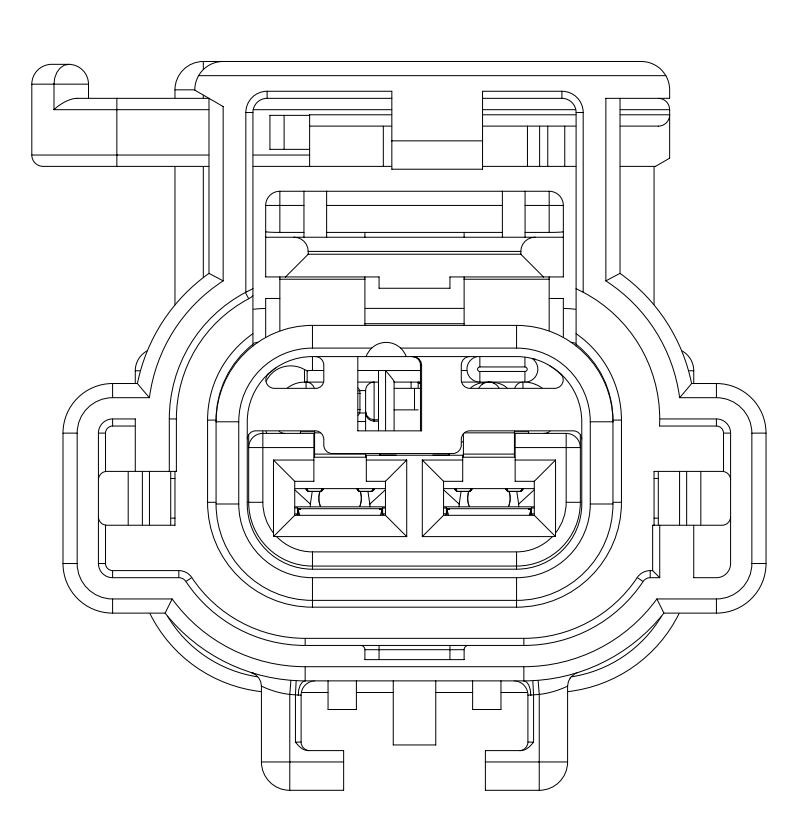

CODE C
SAME AS CODE A
EXCEPT AS SHOWN

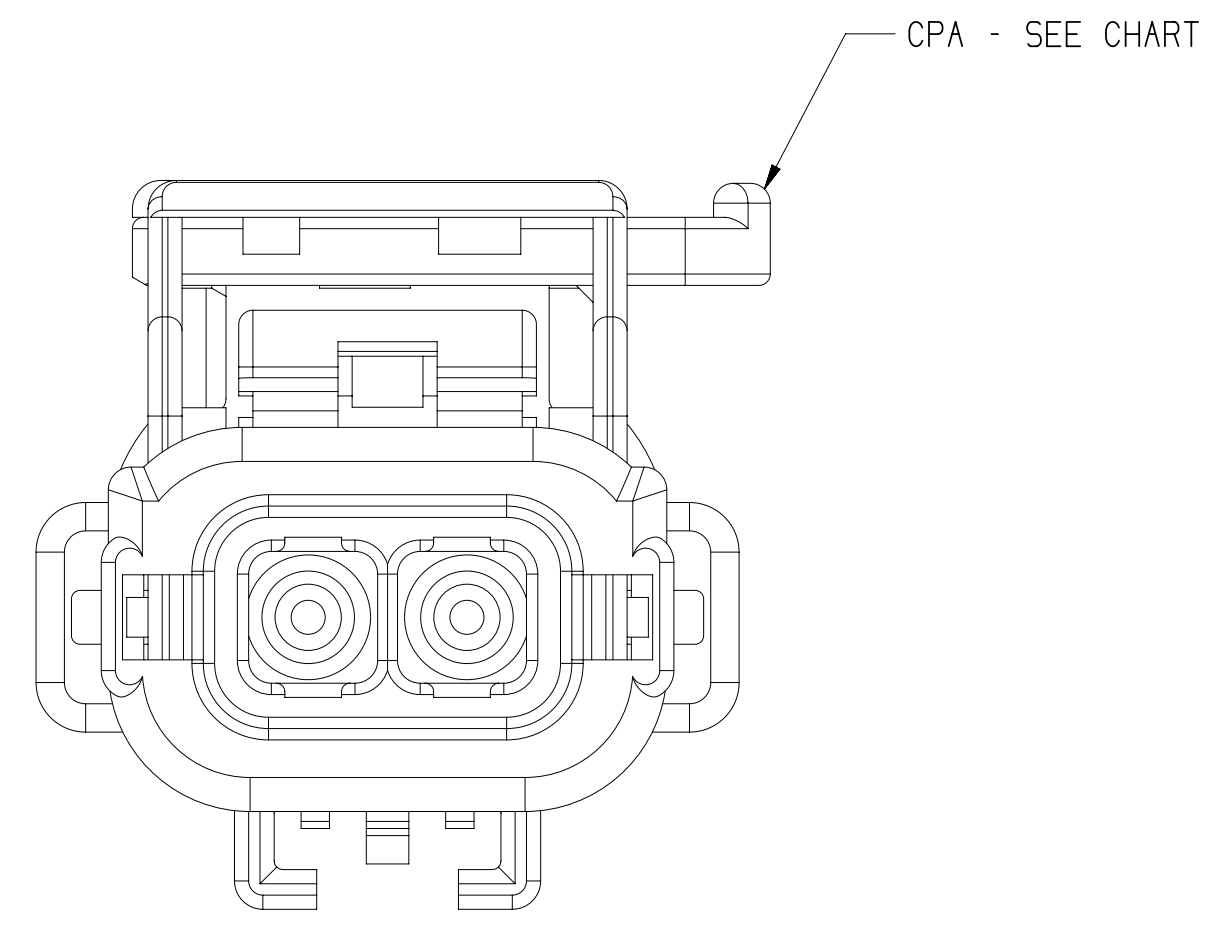

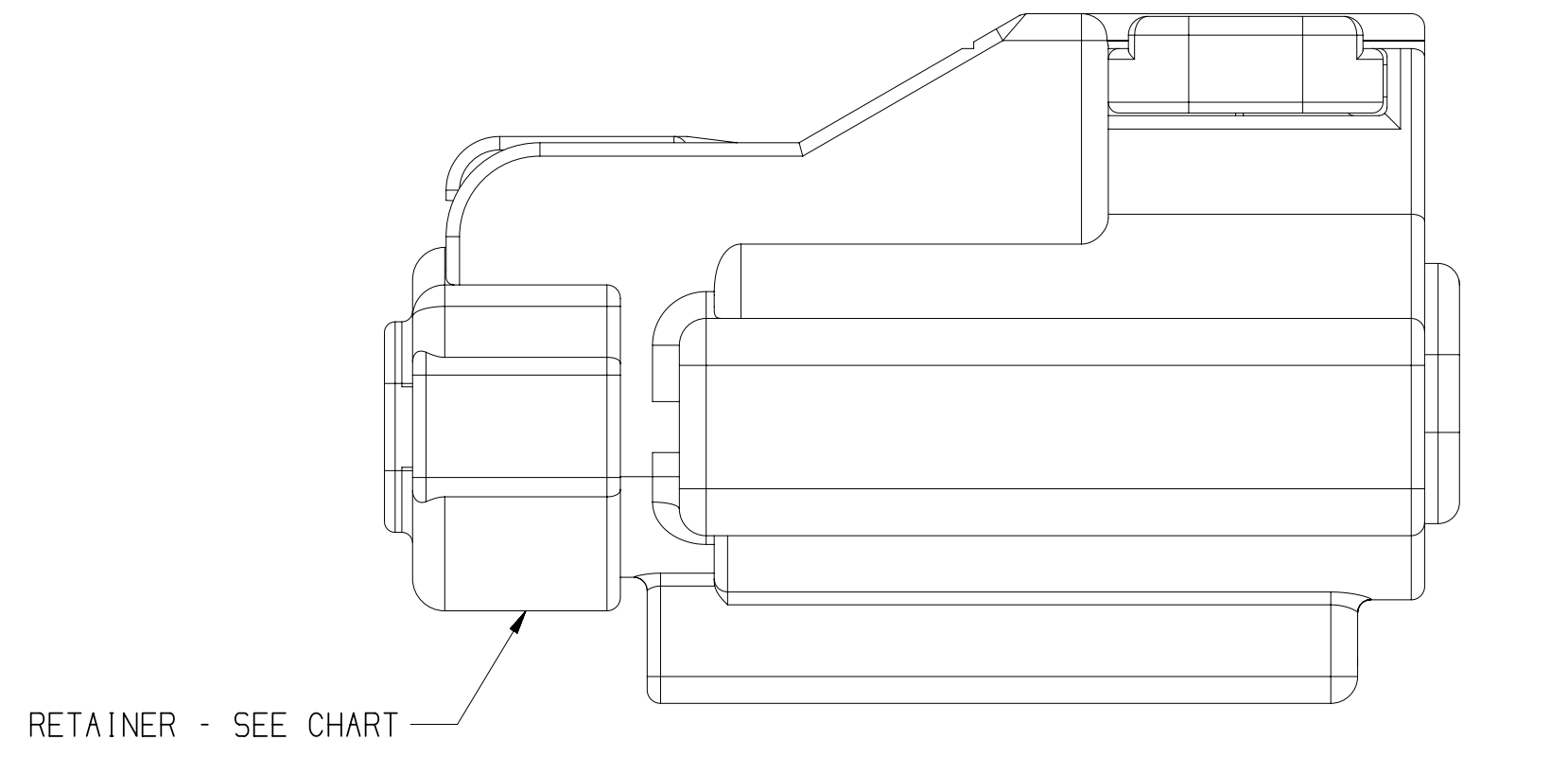

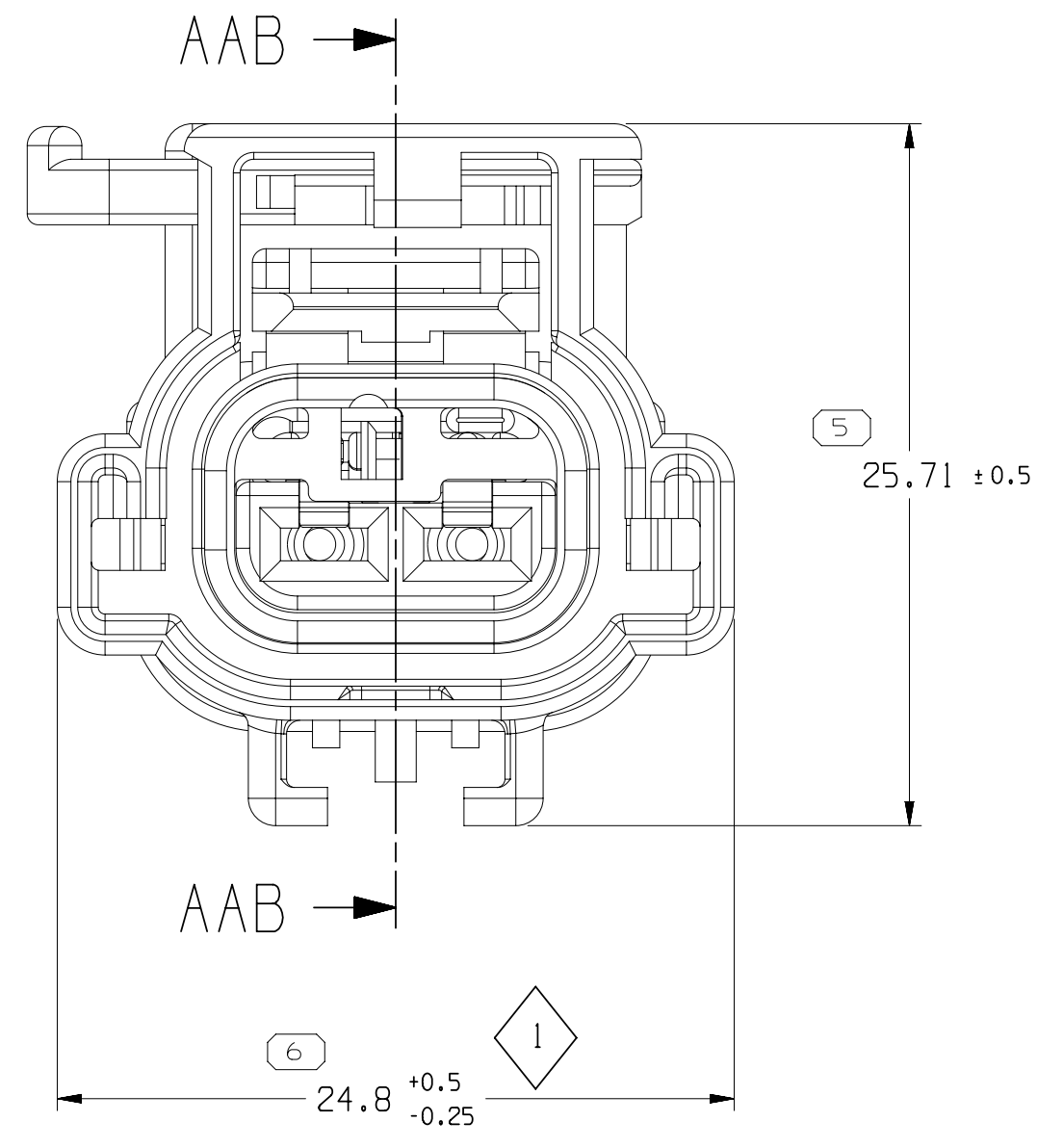

CODE A

NOTES

1. UNLESS OTHERWISE SPECIFIED AND/OR INDICATED:

   DIMENSIONS ARE TO FACE OF VIEW SHOWN AND AUTOMATICALLY ROUNDED BY COMPUTER FOR INSPECTION (SEE MATH MODEL FOR PRECISE DIMENSIONS). FOR ALL OTHER DIMENSIONS NOT SHOWN BUT REQUIRED FOR TOOL BUILD, SEE MATH MODEL FOR PRECISE TOOL PATH DATA.
2. THIS PRODUCT IS NOT CATEGORIZED AS AN APPEARANCE ITEM, MINOR IMPERFECTIONS INCLUDING, BUT NOT LIMITED TO, FLOW MARKS, COLOR BLEMISHES, GATE VESTIGE, AND SOFT FLASH THAT DO NOT AFFECT THE FIT, FORM, OR FUNCTION OF THE PART ARE PERMISSIBLE PER EANP_4-3_CS_01_EN.
3. WIRING FABRICATORS MUST PURCHASE FROM SOURCES SHOWN.
4. ALL THE SEALED CONNECTOR APPLICATIONS MUST BE USED WITH CHRYSLER WIRE SPEC. MS-8288, MS-9502 OR ISO 6722 EQUIVALENTS THIN WALL X-LINK ONLY.
   A- ASSEMBLIES WITH MVL P/N'S 54200239 OR 54200240 END SEALS MUST BE USED WITH 20 TO 14AWG OR ISO EQUIVALENTS WIRES WITH INSULATION Ø1.70 TO Ø2.8 O.D.

   B- ASSEMBLIES WITH MVL P/N'S 54200241 OR F480510 END SEALS MUST BE USED WITH 14 TO 10AWG OR ISO EQUIVALENTS WIRES WITH INSULATION Ø2.50 TO Ø4.09 O.D.
5. MVL P/N'S 54200238 RING SEAL, 54200240 AND F480510 END SEALS BAKED AT 450° F FOR 5 HOURS TO DRIVE OFF VOLITILES.
6. DIRECT CONNECT INTERFACE PER MVL G36002 (CHRYSLER 4707027).
7. TEST METHOD PER SAE/USCAR-2 REV 5, CONNECTOR ENGAGE & DISENGAGE WITH LATCH DEPRESSED FORCE NOT TO EXCEED 75N FOR THIS SYSTEM.

   CPA SEATING FORCES - 40N MAX.

   WEDGE SEATING FORCES - 100N MAX.

   X-MAS TREE CLIP INSERTION FORCES - 75N MAX.
8. MVL SUPPLIER CODE 52772, MOLD & CAVITY I.D. SIGNIFIES TOOL OWNERSHIP FOR REFERENCE.
9. ANNUAL QUALITY REQUIREMENTS:
   IT IS PERMISSIBLE TO PERFORM CONTINUOUS CONFORMANCE PER MVL SPECIFICATION #AQA-001 INSTEAD OF ANNUAL LAYOUT & ANNUAL PV REQUIREMENTS OF QS-9000 SECTION 2 & SAE/USCAR-2.
10. SERVICE TOOLING GUIDE INFORMATION PER APEX TRAINING MANUAL

    ** MVL P/N 54200259 NOT PRODUCED USE MVL P/N 55200200
11. MVL P/N WITH SUFFIX "N" DESIGNATES ASSEMBLIES WITHOUT CPA.
12. MUST BE USED WITH FLUOROSILICONE END SEAL MVL P/N 54200265 DPN 33517371, RETAINER P/N 54200234 DPN 15537420 AND PROPER GAGE TEFLON WIRES FOR FLEX FUEL APPLICATIONS. ASSEMBLE TERMINALS THROUGH RETAINER AND END SEAL PRIOR TO ASSEMBLING INTO TERMINAL CAVITY.
13. FOR APPLICATION DATA SEE THE INDIVIDUAL APPLICATION DRAWINGS.
14. CORPORATE BRAND TO BE APPLIED TO PRODUCT DESIGN PER THE LATEST REVISION OF ESD S1085201.
15. ASM CONN PN 35838342 WAS ANALYZED FOR CREEPAGE & CLEARANCE FOR 48 VOLTS

APTIV				MVL		HOUSING		PLR		SEAL CONN		CBL SEAL		RETAINER		CPA			
PART NO	REV	N/P	CODE	PART NO	PCL	MVL	APTIV	MVL	APTIV	MVL	APTIV	MVL	APTIV	MVL	APTIV	MVL	APTIV	REPLACED BY	TEMP CLASS
~~33511323~~	01	AC	D	F970510	A	54200258	15537449	54200225	15537306	54200238	15537426	F480510	N/A	54200234	15537420	54200003	15537297		4
~~33511322~~	01	AC	C	F870510	A	54200257	15537447	54200225	15537306	54200238	15537426	F480510	N/A	54200234	15537420	54200003	15537297		4
~~33511321~~	01	AC	B	F770510	A	54200256	15537445	54200225	15537306	54200238	15537426	F480510	N/A	54200234	15537420	54200003	15537297		4
~~33511320~~	01	AC	A	F670510	A	55200201	15537438	54200225	15537306	54200238	15537426	F480510	N/A	54200234	15537420	54200003	15537297		4
13585482	01	AG	D	54200262	T	54200258	15537449	54200281	15537462	54200238	15537426	54200240	15537437	54200271	15537460	54200008	15537298		4
13585481	01	AG	C	54200261	T	54200257	15537447	54200281	15537462	54200238	15537426	54200240	15537437	54200271	15537460	54200008	15537298		4
13585480	01	AG	B	54200260	T	54200256	15537445	54200281	15537462	54200238	15537426	54200240	15537437	54200271	15537460	54200008	15537298		4
~~33511319~~	01	AD	A	55200200N	S	55200201	15537438	54200281	15537462	54200238	15537426	54200240	15537437	54200271	15537460	-	-		4
13596027	01	AE	A	55200200	S	55200201	15537438	54200281	15537462	54200238	15537426	54200240	15537437	54200271	15537460	54200008	15537298		4
~~33511318~~	01	AC	A	**54200259	S	54200255	N/A	54200225	15537306	54200238	15537426	54200240	15537437	54200234	15537420	54200003	15537297	13596027	4
~~33511317~~	01	AC	A	54200213N	S	54200227	15537310	54200225	15537306	54200237	15537424	54200241	15537441	54200234	15537420	-	-		3
~~33511316~~	01	AC	A	54200212N	S	54200231	15537319	54200225	15537306	54200238	15537426	54200240	15537437	54200234	15537420	-	-		3
~~33511315~~	01	AC	D	54200209N	S	54200230	15537317	54200225	15537306	54200237	15537424	54200239	15537436	54200234	15537420	-	-		3
~~33511314~~	01	AC	C	54200208N	S	54200229	15537315	54200225	15537306	54200237	15537424	54200239	15537436	54200234	15537420	-	-		3
33511313	01	AB	B	54200207N	S	54200228	15537313	54200225	15537306	54200237	15537424	54200239	15537436	54200234	15537420	-	-		3
13802855	01	AD	A	54200214N	S	54200227	15537310	54200225	15537306	54200237	15537424	54200239	15537436	54200234	15537420	-	-		3
33500084	01	AB	A	54200213	S	54200227	15537310	54200225	15537306	54200237	15537424	54200241	15537441	54200234	15537420	54200003	15537297		3
13581967	01	AF	A	54200212	S	54200231	15537319	54200225	15537306	54200238	15537426	54200240	15537437	54200234	15537420	54200003	15537297		3
13768919	01	AE	D	54200209	S	54200230	15537317	54200225	15537306	54200237	15537424	54200239	15537436	54200234	15537420	54200003	15537297		3
13848326	01	AC	C	54200208	S	54200229	15537315	54200225	15537306	54200237	15537424	54200239	15537436	54200234	15537420	54200003	15537297		3
15380781	01	AH	B	54200207	S	54200228	15537313	54200225	15537306	54200237	15537424	54200239	15537436	54200234	15537420	54200003	15537297		3
~~33511312~~	01	AC	A	54200263	U	54200227	15537310	54200225	15537306	54200264	33517371	-	-	-	-	-	-		3
~~35838342~~	01	-	A	-	-	-	35838338	54200225	15537306	54200237	15537424	54200239	15537436	54200234	15537420	54200003	15537297		3
10757672	01	AB	A	54200206	S	54200227	15537310	54200225	15537306	54200237	15537424	54200239	15537436	54200234	15537420	54200003	15537297		3
~~33500081~~	01	AC	D	54200203	S	54200230	15537317	54200225	15537306	-	-	-	-	-	-	54200003	15537297		3
~~33500080~~	01	AC	C	54200202	S	54200229	15537315	54200225	15537306	-	-	-	-	-	-	54200003	15537297		3
13581772	01	AG	B	54200201	S	54200228	15537313	54200225	15537306	-	-	-	-	-	-	54200003	15537297		3
13869306	01	AC	A	54200200	S	54200227	15537310	54200225	15537306	-	-	-	-	-	-	54200003	15537297		3
~~33511311~~	01	AC	A	54200251	S	54200231	15537319	54200225	15537306	-	-	-	-	-	-	54200003	15537297		3
~~33511310~~	01	AC	D	54200203N	S	54200230	15537317	54200225	15537306	-	-	-	-	-	-	-	-		3
~~33511309~~	01	AC	C	54200202N	S	54200229	15537315	54200225	15537306	-	-	-	-	-	-	-	-		3
~~33511308~~	01	AC	B	54200201N	S	54200228	15537313	54200225	15537306	-	-	-	-	-	-	-	-		3
33511307	01	AB	A	54200200N	S	54200227	15537310	54200225	15537306	-	-	-	-	-	-	-	-		3
~~33511306~~	01	AC	A	54200251N	S	54200231	15537319	54200225	15537306	-	-	-	-	-	-	-	-		3

SEE NOTE #5

DRAWING NUMBER 15443179						
SIZE	SCALE	FRAME NO	SHEET NO	STG	REV	N/P
A1x3	4:1	2 OF 2	1 OF 1	R	03	-

DIMENSIONAL RANGE (MM)									CHART E1
FROM TO	> 0 20	> 20 30	> 30 70	> 70 100	>100 150	>150 200	>200 250	>250 300	>300 400
TOLERANCE UNLESS OTHERWISE SPECIFIED	±0.15	±0.2	±0.3	±0.4	±0.5	±0.6	±0.8	±1	±1.2
ANGULAR TOLERANCE ±2°									

(N/A) PROCESS SENSITIVE DIMENSION

DIMENSIONS ENCLOSED IN ( ) INDICATE REFERENCE DIMENSIONS AND NO TOLERANCE LIMITS ARE ESTABLISHED

A ~~———~~ LINE DRAWN THROUGH A PART NUMBER INDICATES THAT PHYSICAL PARTS ARE NOT AVAILABLE FOR ORDERING.

PART NUMBERS THAT DO NOT HAVE A LINE PRESENT INDICATE THAT PHYSICAL PARTS ARE AVAILABLE FOR ORDERING.

CONTACT APTIV SALES TO ASSURE AVAILABILITY OF PARTS.

DWG TYPE
PART DRAWING

STYLE

VOLUME (CM³)

DISTR CODE
D

UNLESS OTHERWISE SPECIFIED
THIS DOCUMENT IS IN ACCORDANCE WITH ASME Y14.5M-1994 AS AMENDED BY THE GM GLOBAL DIMENSIONING AND TOLERANCING ADDENDUM-2001. SEPARATE PATTERNS OF FEATURES MAY BE GAGED SEPARATELY REGARDLESS OF DATUM REFERENCES.

ALL DIMENSIONS ARE IN MILLIMETERS

REFERENCE

THIRD ANGLE PROJECTION

DO NOT SCALE

USE MATH DATA

CAD NX

•APTIV•
CONNECTION SYSTEMS
WARREN, OH
COPYRIGHT 2021 APTIV. ALL RIGHTS RESERVED.

THIS DRAWING IS THE PROPERTY OF APTIV AND CONTAINS APTIV CONFIDENTIAL INFORMATION. THE REPRODUCTION, DISTRIBUTION AND UTILIZATION OF THIS DOCUMENT OR ITS RELATED CAD MATH DATA, AS WELL AS COMMUNICATION OF ANY CONTENT TO OTHERS, WITHOUT EXPRESS AUTHORIZATION, IS PROHIBITED.

		DATE
DR		
APVD1	MA. ANTONIETA HDZ	03N021
APVD2	J.S. ALVARADO	03N021
APVD3	JESUS ACUNA	04N021
APVD4		
APVD5		

SUBSTANCES OF CONCERN AND RECYCLED CONTENT PER APTIV 10949001

MATERIAL
SEE CHART

DRAWING NAME
TAXI CONN 2 F APEX 2.8 SLD

DRAWING NUMBER 15443179						
SIZE	SCALE	FRAME NO	SHEET NO	STG	REV	N/P
A1x3	4:1	1 OF 2	1 OF 1	R	03	-

15443179

User: nzd447 Part: 15443179-CUS01-S04/03 Date: 27-Feb-26 Time: 12:09:42