SYMBOL DEFINITION		
A DIMENSION WITHOUT AN INSPECTION REPORT SYMBOL ( ) DOES NOT REQUIRE INSPECTION. IT MAY BE CONTROLLED ON THE INDIVIDUAL COMPONENT DRAWING.	TOTAL NO OF INSPECTIONS REQUIRED	16
	LAST NO. USED	10

MISSING SYMBOLS
NO MISSING SYMBOL NUMBER

DWG STATUS DATE	STG	REV	N/P	CHG	ZONE	REVISION HISTORY	AUTH	DR	APVD 1	APVD 2
26JL19	R	01	AA	-		WAS ON DRAWING 33125205 SHT 1	444080	JGO	ERM	ERM
02MY22	R	01	AB	-		UPDATED PART AVAILABILITY (PN WAS NOT AVAILABLE)	557262	AHY	AHY	LAR

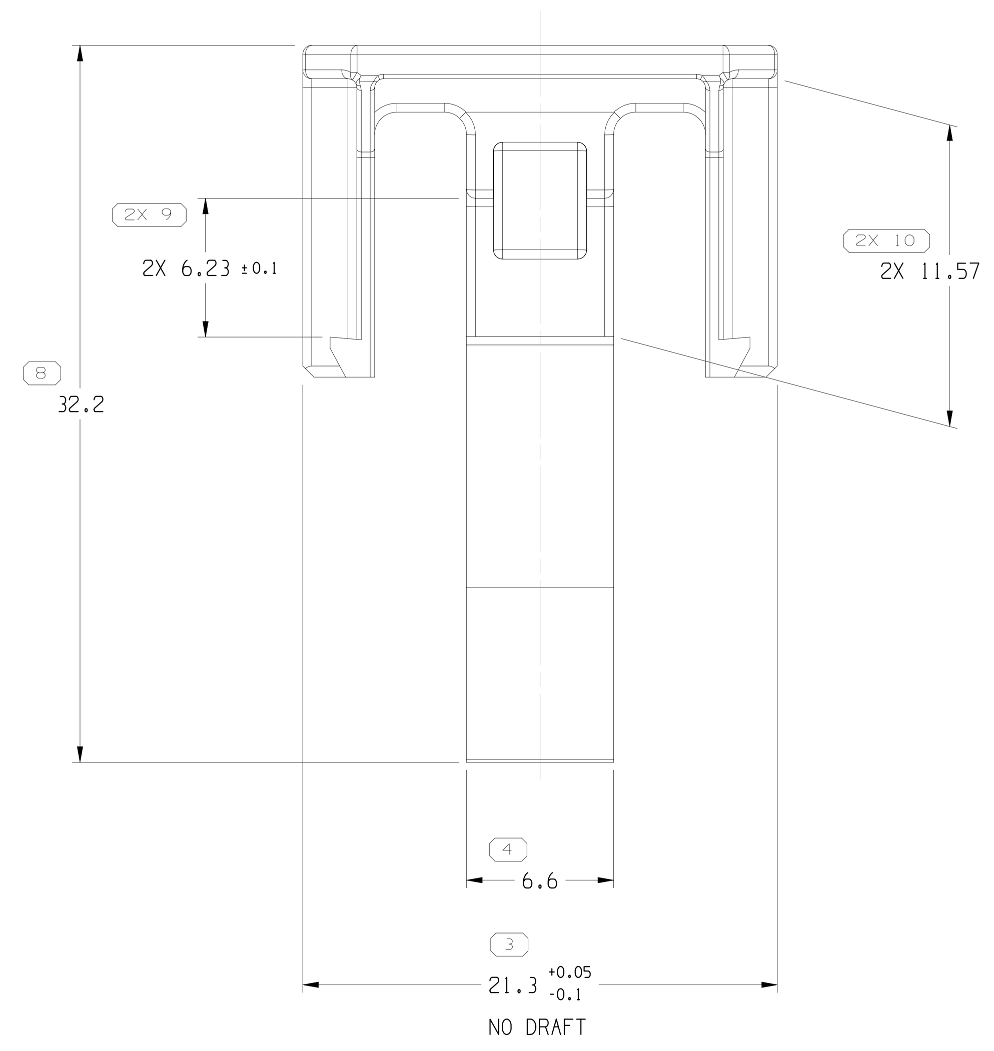

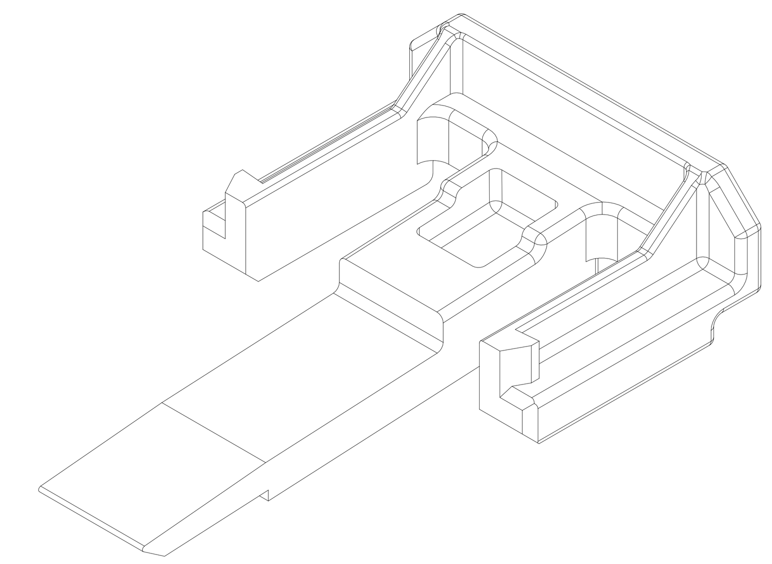

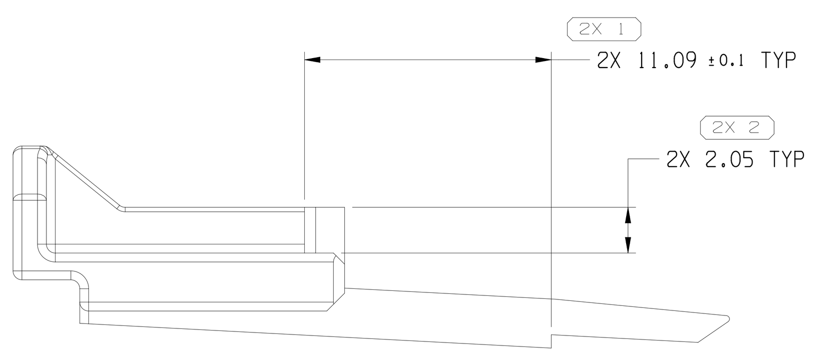

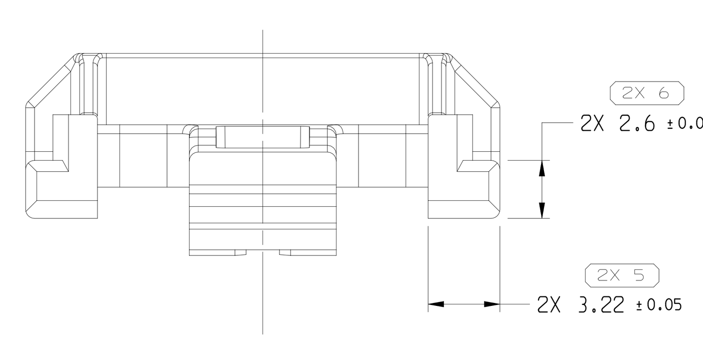

TYPE 101

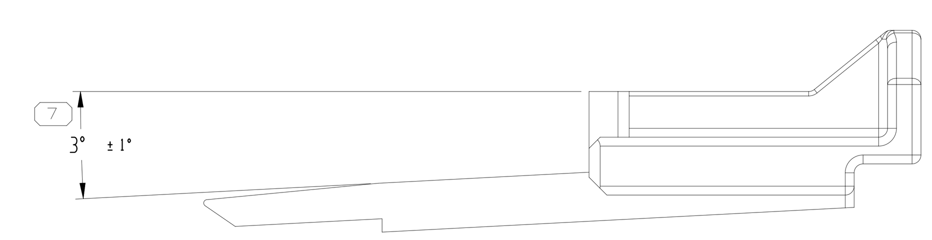

NOTES

1. UNLESS OTHERWISE SPECIFIED AND/OR INDICATED:

   DIMENSIONS ARE TO FACE OF VIEW SHOWN AND AUTOMATICALLY ROUNDED BY COMPUTER FOR INSPECTION (SEE MATH MODEL FOR PRECISE DIMENSIONS). FOR ALL OTHER DIMENSIONS NOT SHOWN BUT REQUIRED FOR TOOL BUILD, SEE MATH MODEL FOR PRECISE TOOL PATH DATA.

2. PARTS SHOWN ON THIS DRAWING USED IN ASSEMBLIES SHOWN ON TAXI 35212794.

3. THIS PRODUCT IS NOT CATEGORIZED AS AN APPEARANCE ITEM, MINOR IMPERFECTIONS INCLUDING, BUT NOT LIMITED TO, FLOW MARKS, COLOR BLEMISHES, GATE VESTIGE, AND SOFT FLASH THAT DO NOT AFFECT THE FIT, FORM, OR FUNCTION OF THE PART ARE PERMISSIBLE PER DPNP-4.7-CS-01.

4. CORPORATE BRAND TO BE APPLIED TO PRODUCT DESIGN PER THE LATEST REVISION OF ESD S1085201.

DIMENSIONAL RANGE (MM)									CHART E1
FROM / TO	> 0 / 20	> 20 / 30	> 30 / 70	> 70 / 100	>100 / 150	>150 / 200	>200 / 250	>250 / 300	>300 / 400
TOLERANCE UNLESS OTHERWISE SPECIFIED	±0.15	±0.2	±0.3	±0.4	±0.5	±0.6	±0.8	±1	±1.2

ANGULAR TOLERANCE ±2°

(4) PROCESS SENSITIVE DIMENSION

DIMENSIONS ENCLOSED IN ( ) INDICATE REFERENCE DIMENSIONS AND NO TOLERANCE LIMITS ARE ESTABLISHED

A LINE DRAWN THROUGH A PART NUMBER INDICATES THAT PHYSICAL PARTS ARE NOT AVAILABLE FOR ORDERING.

PART NUMBERS THAT DO NOT HAVE A LINE PRESENT INDICATE THAT PHYSICAL PARTS ARE AVAILABLE FOR ORDERING.

CONTACT APTIV SALES TO ASSURE AVAILABILITY OF PARTS.

DWG TYPE: PART DRAWING

STYLE:

VOLUME (CM³): 0.973

DISTR CODE: D

UNLESS OTHERWISE SPECIFIED

THIS DOCUMENT IS IN ACCORDANCE WITH ASME Y14.5M-1994 AS AMENDED BY THE GM GLOBAL DIMENSIONING AND TOLERANCING ADDENDUM-2001. SEPARATE PATTERNS OF FEATURES MAY BE GAGED SEPARATELY REGARDLESS OF DATUM REFERENCES.

ALL DIMENSIONS ARE IN MILLIMETERS

REFERENCE:

THIRD ANGLE PROJECTION

DO NOT SCALE

USE MATH DATA

CAD NX

•APTIV•

CONNECTION SYSTEMS

WARREN, OH

COPYRIGHT 2019 APTIV. ALL RIGHTS RESERVED.

THIS DRAWING IS THE PROPERTY OF APTIV AND CONTAINS APTIV CONFIDENTIAL INFORMATION. THE REPRODUCTION, DISTRIBUTION AND UTILIZATION OF THIS DOCUMENT OR ITS RELATED CAD MATH DATA, AS WELL AS COMMUNICATION OF ANY CONTENT TO OTHERS, WITHOUT EXPRESS AUTHORIZATION, IS PROHIBITED.

		DATE
DR		
APVD1	J. GAMEZ	26JL19
APVD2	JOSE RUIZ	26JL19
APVD3	JOSE RUIZ	26JL19
APVD4		
APVD5		

SUBSTANCES OF CONCERN AND RECYCLED CONT10949001 10949001

MATERIAL: POLYESTER COMPOUND RED

DRAWING NAME: LOCK CPA

DRAWING NUMBER: 35325696

SIZE	SCALE	FRAME NO	SHEET NO	STG	REV	N/P
A0	5:1	1 OF 1	1 OF 1	R	01	AB

User: GZWXM1 Part: 35325696-CUS01-S01/01AB Date: 03-May-22 Time: 07:08:23
GZWXM1,05032022,07:07,174pass,nor