SYMBOL DEFINITION

▲ DIMENSION WITHOUT AN INSPECTION REPORT SYMBOL □ DENOTES PRECISE INSPECTION CONTROLLED ON THE INDIVIDUAL COMPONENT DRAWING.	TOTAL NO. OF INSPECTIONS REQUIRED	5
	LAST NO. USED	5

MISSING SYMBOLS

NO MISSING SYMBOL FOUND

DATE	SYM	ZONE	REASON	NOTE	BY	APPD
[illegible]			PELE-SE	[illegible]	[illegible]	[illegible]
[illegible]			MODIFY [illegible] CODE.	[illegible]	[illegible]	[illegible]
[illegible]			UPDATE [illegible]	[illegible]	[illegible]	[illegible]
[illegible]			UPDATE [illegible]	[illegible]	[illegible]	[illegible]
[illegible]			UPDATE [illegible]	[illegible]	[illegible]	[illegible]
[illegible]			UPDATE [illegible]	[illegible]	[illegible]	[illegible]

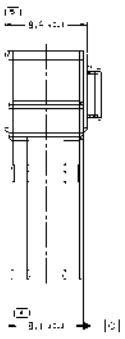

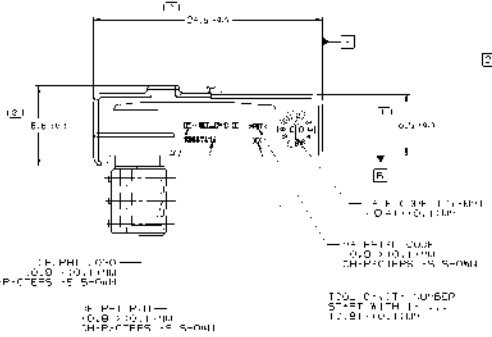

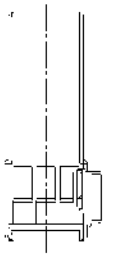

NOTES

1. UNLESS OTHERWISE SPECIFIED ABOVE INDICATED:

   DIMENSIONS ARE TO FACE OF OTHER SHOWN AND AUTOMATICALLY MODIFIED BY COMPENSATION INSPECTION (SEE INSPECTION REPORT FOR PRECISE DIMENSIONS). FOR ALL OTHER DIMENSIONS NOT SHOWN BUT REQUIRED FOR TOOL BUILD, SEE DATA MODEL FOR PRECISE TOOL INPUT DATA.

2. REFERENCE MATING COMPONENTS OR POLYAMIDE:

   CONNECTOR 12037-15

3. FOR APPLICATION DATA SEE THE APPLICATION DRAWING.

UNLESS OTHERWISE SPECIFIED	PART DRAWING
CODE IDENT 24710	SIZE
UNLESS OTHERWISE SPECIFIED	
ALL DIMENSIONS IN MILLIMETERS	REFERENCE

DELPHI

DELPHI PROPRIETARY ELECTRICAL ARCHITECTURE

	DATE
MADE BY	[illegible]
MADE BY	[illegible]
MADE BY	[illegible]
MADE BY	
MADE BY	

SUBSTITUTES OF [illegible] MUST BE [illegible]

MATERIAL: POLYESTER [illegible]

DRAWING TITLE: CONN [illegible] F 0.04

DRAWING NUMBER: 13837414

SIZE	SCALE	SHEET NO	SHEET NO	[illegible]
A1	5:1	1 OF 1	1.0	[illegible]