SYMBOL DEFINITION		MISSING SYMBOLS
A DIMENSION WITHOUT AN INSPECTION REPORT SYMBOL DOES NOT REQUIRE INSPECTION. IT MAY BE CONTROLLED ON THE INDIVIDUAL COMPONENT DRAWING.	TOTAL NO OF INSPECTIONS REQUIRED 37	NO MISSING SYMBOL NUMBER
	LAST NO. USED 21	

DWG STATUS DATE	STA	REV	SVP	DWN	ZONE	REVISION HISTORY	AUTH	DR	KP/DV 1	KP/DV 2
15JA13	R	01	-	-	-	RELEASED PART DRAWING	421075	JCF	JCF	AGG
06FEB13	R	01	AA	-	-	DIM 2X 46 ±0.7 TYP WAS 2X 46 TYP, 3X 32 WAS 32, DIM 2X 26 ±0.55 WAS 26 AND ADDED BASIC DIM (1) PLC)	421078	DMF	JVM	AGG
20MR14	R	01	AB	-	-	ADDED OPTIONAL CONSTRUCTION VIEW, ADDED DIMS (6 PLCS), RELOCATED DATUM B AND REVISED DIMS (3 PLCS)	425969	MEA	MEA	MEA

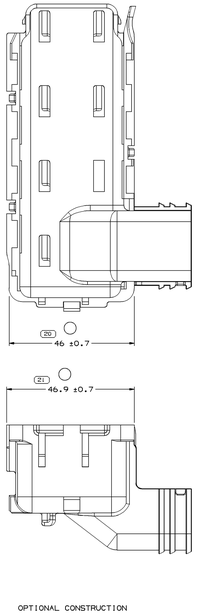

OPTIONAL CONSTRUCTION

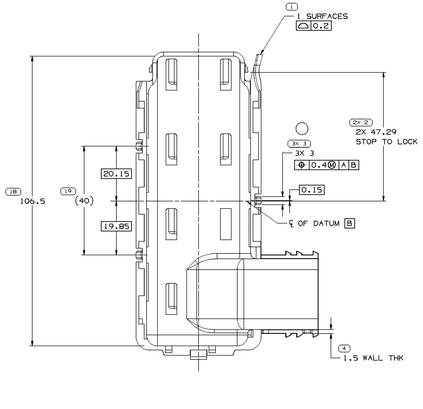

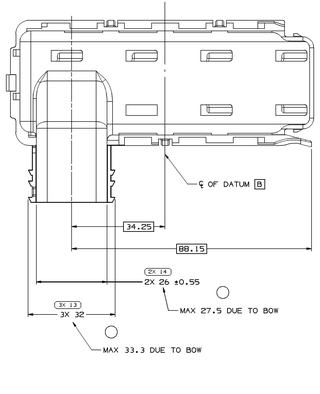

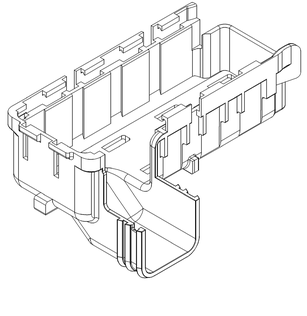

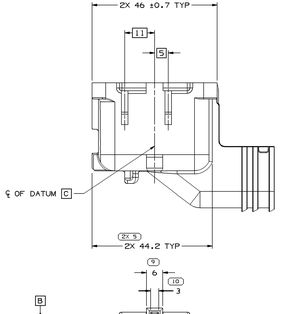

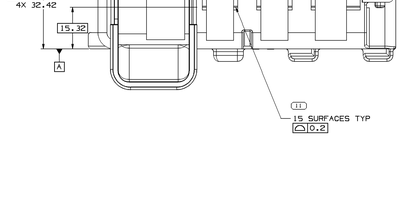

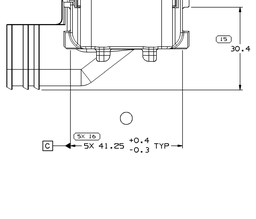

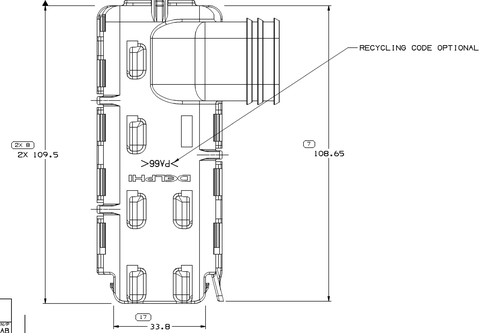

NOTES

1. UNLESS OTHERWISE SPECIFIED AND/OR INDICATED:

   DIMENSIONS ARE TO FACE OF VIEW SHOWN AND AUTOMATICALLY ROUNDED BY COMPUTER FOR INSPECTION (SEE MATH MODEL FOR PRECISE DIMENSIONS). FOR ALL OTHER DIMENSIONS NOT SHOWN BUT REQUIRED FOR TOOL BUILD, SEE MATH MODEL FOR PRECISE TOOL PATH DATA.

2. MATERIAL RECYCLING CODE PER ISO 11469, (2.3)X(0.1) CHARACTERS AS SHOWN TO BE LOCATED ON ANY EXTERIOR SURFACE.

3. THIS PRODUCT IS NOT CATEGORIZED AS AN APPEARANCE ITEM, MINOR IMPERFECTIONS INCLUDING, BUT NOT LIMITED TO, FLOW MARKS, COLOR BLEMISHES, GATE VESTIGE, AND SOFT FLASH THAT DO NOT AFFECT THE FIT, FORM, OR FUNCTION OF THE PART ARE PERMISSIBLE PER DPNP-4.7-CS-01

4. REFERENCE MATING COMPONENTS OR EQUIVALENT:

   CONNECTOR 33116191

5. (2.3)X(0.1) DELPHI CORPORATE BRAND TO BE LOCATED ON ANY EXTERIOR SURFACE, PREFERABLY VISIBLE AT FINAL ASSEMBLY. OPTIONAL CONSTRUCTION FOR EXISTING TOOLING MAY BE "PED".

6. THIS PART USED IN ELECTRICAL CENTER FINAL ASSEMBLY TBD OR EQUIVALENT.

(9) PROCESS SENSITIVE DIMENSION

DIMENSION ENCLOSED IN ( ) INDICATE REFERENCE DIMENSION, OR NO TOLERANCE LIMITS ARE ESTABLISHED

| GEOMETRICAL RADII (MM) | | |