NOTA	SPECIFICATIONS
1	CONNECTEUR DOIT ETRE CONFORME AU CDC :96 238 404 99 *FEMALE CONNECTOR ACCORDING TO SPECIFICATION PSA :96 238 404 99*
2	CONNECTEUR SUIVANT: *FEMALE CONNECTOR ACCORDING TO* -CLASSE DE TEMPERATURE T3 SELON B217050 REV A *TEMPERATURE CLASS T3 ACCORDING TO B217050 REV A* -CLASSE DE VIBRATION MOTEUR SELON B217050 REV A *ENGINE VIBRATOR CLASS ACCORDING TO B217050 REV A* -CLASSE ETANCHEITE 2 SELON B217050 REV A *SEALING CLASS 2 ACCORDING TO B217050 REV A*
3	PRECONISATION D'UTILISATION /*USER MANUAL* REF MVL: PU 008 / *MVL'S REFERENCE: PU 008*
4	ALVEOLE SUIVANT STE: 96 289 050 99 *CAVITY ACCORDING TO: STE: 96 289 050 99*
5	CONNECTEUR ET POSITION ALVEOLE CONFORMES AU PLAN D'INTERFACE 211FT0523 *FEMALE CONNECTOR AND CAVITY'S POSITION ACCORDING TO: DRAWING INTERFACE 211FT0523*
6	DIAMETRE DE L'ISOLANT DES FILS *WIRE INSULATION DIAMETER* 1.5 :MINI=1.40 :MAXI=2.80
7	MASSE DU PRODUIT LIVRABLE : 15g *DELIVERY CONNECTOR WEIGHT : 15g*
8	CHARNIERE DE PLAQUETTE ARRIERE ABSENTE OU CASSEE ADMISE *NO WAFER HINGE OR WAFER HINGE BROKEN ALLOWED*
9	DEFAUTS D'ASPECT SUR ZONES NON FONCTIONNELLES ADMIS *VISUAL DEFECTS ON NO FUNCTIONNAL AREAS ALLOWED*
10	ACCROCHAGE SELON STE 96 153 261 99 *FIXING ACCORDING TO STE. 96.153.261 99*

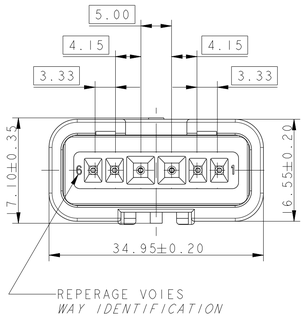

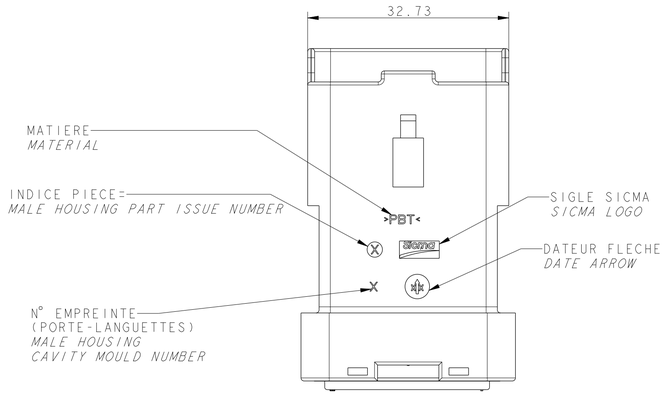

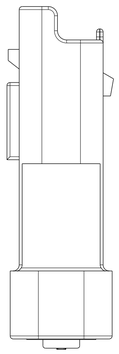

COUPE A-A

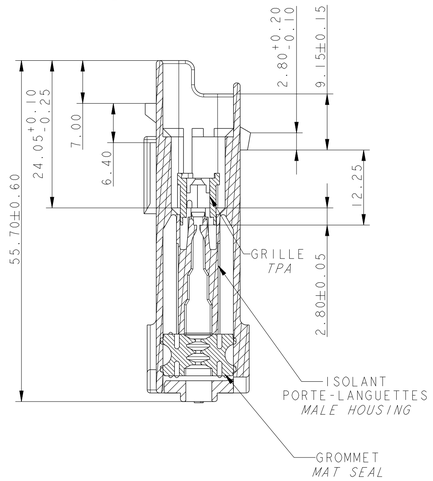

ISOLANT PORTE-LANGUETTES *MALE HOUSING*	211 1 1 051	PBT NON CHARGE *PBT: 0% GF*	MARRON *BROWN*
	211 1 5 051		VERT *GREEN*
	211 1 4 051		JAUNE *YELLOW*
GRILLE *TPA*	211 M 4 050	PBT: 15% FV *PBT: 15% GF*	JAUNE *YELLOW*
GROMMET *MAT SEAL*	211 M 110	SILICONE 30Sh AUTO-LUBRIFIE	VERT *GREEN*
DESIGNATION *DESCRIPTION*	REF. MVL *MVL'S REFERENCE*	MATIERE *MATERIAL*	COULEUR *COLOUR*

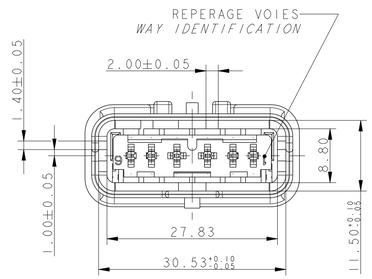

3D VIEW

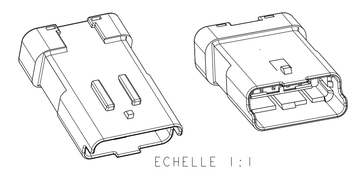

ECHELLE 1:1
SCALE 1:1

CODAGE JAUNE REPRESENTE
YELLOW CODING DRAW

6V 1.5 / 6W 1.5

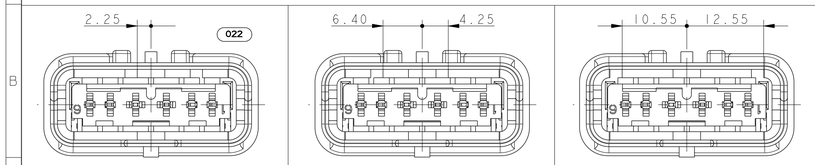

VUE F
VIEW F
TOLERANCES ±0.10

MARRON / *BROWN*	JAUNE / *YELLOW*	VERT / *GREEN*	COULEUR *COLOUR*	
211 PL 06 2S 1 049	211 PL 06 2S 4 049	211 PL 06 2S 5 049	PART NUMBER	MVL
A	A	A	PART REVISION	
13606820	13642394	13716617	PART NUMBER	DELPHI
01	01	01	PART REVISION	

B

ECN-NO. *NUMERO ECN*	POSITION *POSITION*	CHANGE DESCRIPTION *MODIFICATION*
-	-	-
-	-	-
-	-	-
-	-	-
-	-	DELPHI P/N ADDED

PRODUCT SPEC. *SPECIF. PRODUIT* -
PACKAGING SPEC. *SPECIF. EMBALAGE* -
APPLICATION SPEC. *SPECIF. APPLICATION* -

COPYRIGHT DELPHI CORPORATION AND/OR ITS AFFILIATES. ALL RIGHTS RESERVED. REVISED
THIS DRAWING IS THE PROPERTY OF DELPHI CORPORATION AND CONTAINS DELPHI CONFIDENTIAL INFORMATION. THE REPRODUCTION, DISTRIBUTION AND UTILIZATION OF THIS DOCUMENT OR ITS RELATED CAD MATH DATA, AS WELL AS COMMUNICATION OF ANY CONTENT TO OTHERS, WITHOUT EXPRESS AUTHORIZATION, IS PROHIBITED.
CE PLAN EST LA PROPRIETE DE DELPHI CORPORATION ET CONTIENT DES INFORMATIONS DELPHI CONFIDENTIELLES. LA REPRODUCTION, LA DISTRIBUTION ET L'UTILISATION DE CE DOCUMENT OU DE SES DONNEES MATHEMATIQUES CAO, AINSI QUE LA COMMUNICATION DE TOUT CONTENU A AUTRUI, SANS AUTORISATION EXPRESSE, EST INTERDITE.

TOLERANCES *TOLERANCES* ±0.1 ±2°
CONTEMPRE N° *CONTE-PARTIE N°* -
DO NOT MEASURE DRAWING *NE PAS PRENDRE DE COTES*
MATERIAL : *MATIERE :* SEE TABLE
SURFACE FINISH *ETAT DE SURFACE* -
COLOUR : *COULEUR :* SEE TABLE
TOOL NO. *OUTIL N°* -
ECO Loc. Code *CODE B.E.* FE

	DATE *DATE*	NAME *NOM*
CREATED BY *CREE PAR*	2010/02/22	P PERYASAMY
MODIFIED BY *MODIF. PAR*	2013/05/07	F FAURIE
CHECKED BY *VERIF. PAR*	2013/05/14	S LACOTE
APPROVED BY *APPR. PAR*	2013/05/14	Pascal MENARD

FILE NAME *NOM DE FICHIER* PCC0679449

TITLE *DESIGNATION* **6W 15 MALE CONNECTOR**
PROJECT *PROJET* **MINI SEALED FAMILY**
ESR NO. *NUMERO ESR* FRA-0102
CAT. NO. *NUMERO CAT.* 211PL06XSX049
DOCUMENT UNDER PDS CONTROL *DOCUMENT GERE SOUS P.D.S.*
NO MODIFICATION ALLOWED OUTSIDE *PAS DE MODIFICATION EN DEHORS*

DELPHI
DELPHI PACKARD ELECTRICAL/ELECTRONIC ARCHITECTURE
EPERNON, FRANCE

ISO PROJECTION *PROJECTION ISO*
DIMENSION IN MILLIMETERS *DIMENSIONS EN MILLIMETRES*
CAD SYSTEM pro / eng.
DWG SIZE *FORMAT* A1

DRAWING NUMBER *REF. PLAN* **PCC0679449** REV. *IND.* **B**
STATE *ETAT* **SERIAL RELEASED**
PART NUMBER *REF. ARTICLE* **See Table** REV. *IND.* -
APPROVAL LEVEL *NIV. D'APPROBATION* A
SHEET *FEUILLE* 1 of 1 sur 1
SCALE *ECH.* 2:1

EIR C04 112 F29