NOTA NOTE	SPECIFICATIONS
1	CONNECTEUR DOIT ETRE CONFORME AU CDC: *FEMALE CONNECTOR ACCORDING TO PSA SPECIFICATION:* 96 238 404 99
2	CONNECTEUR SUIVANT: *FEMALE CONNECTOR ACCORDING TO:* -CLASSE DE TEMPERATURE T3 SELON B217050 REV A *-TEMPERATURE CLASS T3 ACCORDING TO B217050 REV A* -CLASSE DE VIBRATION MOTEUR SELON B217050 REV A *-ENGINE VIBRATOR CLASS ACCORDING TO B217050 REV A* -CLASSE ETANCHEITE 2 SELON B217050 REV A *-SEALING CLASS 2 ACCORDING TO B217050 REV A*
3	PRECONISATION D'UTILISATION: *USER'S MANUAL:* PU 071
4	ALVEOLE SUIVANT: *CAVITY ACCORDING TO* STE: 96 288 230 99
5	CONNECTEUR ET POSITION ALVEOLE CONFORMES AU PLAN D'INTERFACE: *FEMALE CONNECTOR AND CAVITY'S POSITION ACCORDING TO:* 211FT0289 ET/*AND* STE 96 339 622 99
6	CONDUCTEUR SUIVANT/ *WIRE ACCORDING TO:* STE : 96 418 794 99
7	CONDITIONNEMENT SUIVANT NORME: *PACKAGING ACCORDING TO STANDARD:* E73 03 150G
8	DIAMETRE DE FILS / *WIRE DIAMETER* Ø 1.5 MINI=1.40 MAXI=2.80 Ø 2.8 MINI=1.60 MAXI=3.45
9	MASSE DU PRODUIT LIVRABLE / *DELIVERY CONNECTOR WEIGHT:* 12g
10	CHARNIERE DE PLAQUETTE ARRIERE ABSENTE OU CASSEE ADMISE *NO WAFER HINGE OR WAFER HINGE BROKEN ALLOWED*
11	DEFAUTS D'ASPECT SUR ZONES NON FONCTIONNELLES ADMIS *VISUAL DEFECTS ON NO FUNCTIONNAL AREAS ALLOWED*

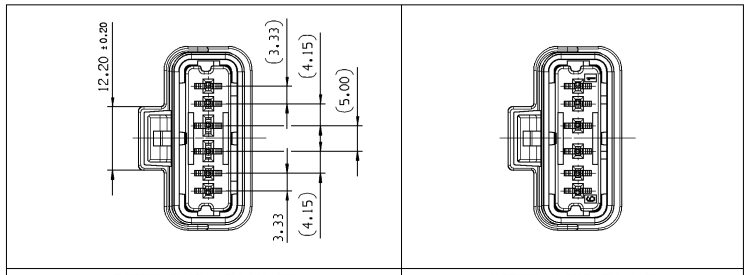

PORTE-CLIPS 6V MIXTE
6 WAY MIXED FEMALE HOUSING

PORTE-CLIPS 6V 1.5
6 WAY 1.5 FEMALE HOUSING

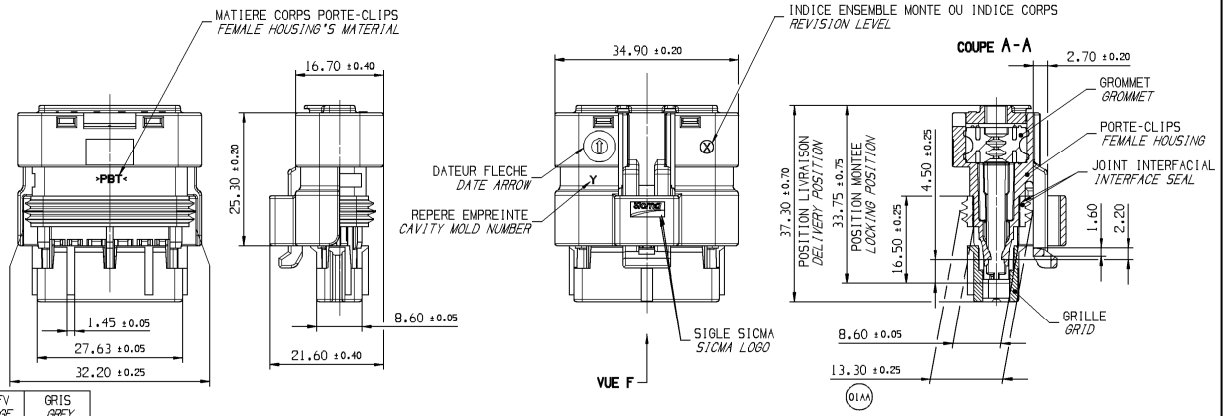

PORTE-CLIPS 6V 1.5 *FEMALE HOUSING 6W 1.5*	PORTE-CLIPS *FEMALE HOUSING*	211 I 8 077	33501298	PBT 0% FV *PBT 0% GF*	GRIS *GREY*
	GRILLE *GRID*	211 M 1 125	33501311	PBT 15% FV *PBT 15% GF*	MARRON *BROWN*
		211 M 4 125	15537747		JAUNE *YELLOW*
		211 M 5 125	33508061		VERT *GREEN*
	GROMMET *GROMMET*	211 M 137	33501312	SILICONE 30Sh *SILICON 30Sh*	BLEU *BLUE*
	JOINT INTERFACIAL *INTERFACE SEAL*	211 M 077	33501306	SILICONE 30Sh *SILICON 30Sh*	BLEU *BLUE*
PORTE-CLIPS 6V MIXTE *FEMALE HOUSING 6W MIXED*	PORTE-CLIPS *FEMALE HOUSING*	211 I 0 075	33501295	PBT 0% FV *PBT 0% GF*	NOIR *BLACK*
	GRILLE *GRID*	211 M 0 123	33501301	PBT 15% FV *PBT 15% GF*	NOIR *BLACK*
		211 M 6 123	33508062		BLEU *BLUE*
		211 M 8 123	33501317		GRIS *GREY*
	GROMMET *GROMMET*	211 M 110	33501310	SILICONE 30Sh *SILICON 30Sh*	VERT *GREEN*
	JOINT INTERFACIAL *INTERFACE SEAL*	211 M 077	33501306	SILICONE 30Sh *SILICON 30Sh*	BLEU *BLUE*
	DESIGNATION *DESCRIPTION*	**REF. ORIGINE** *LEGACY'S REFERENCE*	**REF. ORIGINE** *DELPHI'S REFERENCE*	**MATIERE** *MATERIAL*	**COULEUR** *COLOUR*

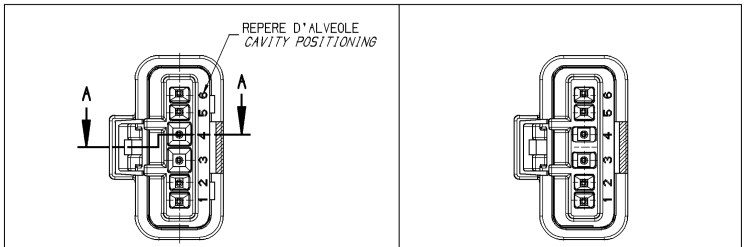

PORTE-CLIPS 6V MIXTE
6 WAY MIXED FEMALE HOUSING

PORTE-CLIPS 6V 1.5
6 WAY 1.5 FEMALE HOUSING

3D VIEW

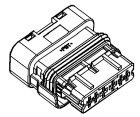

ECHELLE 1:1
SCALE 1:1
CODAGE NOIR REPRESENTE
BLACK CODING REPRESENTED

A LINE DRAWN THROUGH A PART NUMBER INDICATES THAT PHYSICAL PARTS ARE NOT AVAILABLE FOR ORDERING.

PART NUMBERS THAT DO NOT HAVE A LINE PRESENT INDICATE THAT PHYSICAL PARTS ARE AVAILABLE FOR ORDERING.

CONTACT DELPHI SALES TO ASSURE AVAILABILITY OF PARTS.

LA LIGNE TRACÉE SUR LA RÉFÉRENCE PIÈCE INDIQUE QUE LA PIÈCE N'EST PAS DISPONIBLE À LA COMMANDE.

LES RÉFÉRENCES PIÈCES QUI NE SONT PAS BARRÉES INDIQUENT QUE CELLES-CI SONT DISPONIBLES PHYSIQUEMENT POUR ÊTRE COMMANDÉES.

CONTACTER LE SERVICE COMMERCIAL DE DELPHI POUR S'ASSURER DE LA DISPONIBILITÉ DES PIÈCES

SHARP CORNER TOLERANCE

DIM TO CHECK
COTES A VERIFIER
DIM FOR HELP
COTES POUR INFO
THEORETIC DIM
COTES THEORIQUES

PORTE-CLIPS 6V MIXTE
6 WAY MIXED FEMALE HOUSING

PORTE-CLIPS 6V 1.5
6 WAY 1.5 FEMALE HOUSING

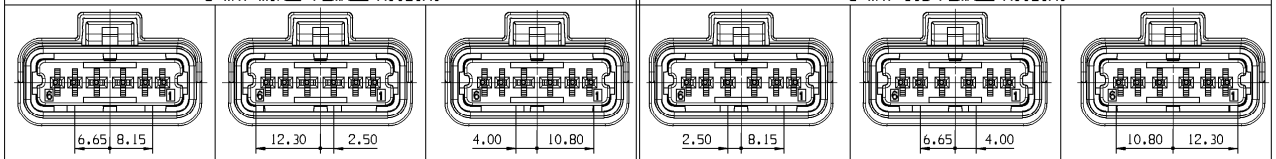

VUE F
VIEW F
± 0.10

NOIR *BLACK*	BLEU *BLUE*	GRIS *GREY*	MARRON *BROWN*	JAUNE *YELLOW*	VERT *GREEN*	COULEUR *COLOUR*	
211 PC 06 9S 0 149	211 PC 06 9S 6 149	211 PC 06 9 S 8 149	211 PC 06 2 S 1 149	211 PC 06 2 S 4 149	211 PC 06 2 S 5 149	PART NUMBER	MVL
A	A	A	A	A	A	PART REVISION	
10866611	10866612	10866614	10865112	10866616	10866615	PART NUMBER	DELPHI
01	01	01	01	01	01	PART REVISION	

DWG STATUS DATE	STG	REV	N/P	CHG	ZONE	REVISION HISTORY	AUTH	DR	APVD 1	APVD 2
24JA15	R	01				FILE TRANSLATED FROM MVL SYSTEM		DGL	DGL	DGL
18JA18	R	01	AA		CE10 E5	REDRAWN IN NX DELPHI P/N ADDED DIMENSION WAS 13.80± 0.25		A.RAJ	S.THO	O.GOL

DWG TYP
CUSTOMER PART DRAWING

WEIGHT (GR)
SEE NOTE 9

VOLUME (CM³)

ROUTING

DISTR CODE
D

UNLESS OTHERWISE SPECIFIED

GENERAL TOLERANCES ACCORDING TO:
±0.1 ±2°

GD&T ACCORDING TO:

REFERENCE
211FT0515

FIRST ANGLE PROJECTION

DO NOT SCALE

USE MATH DATA

NX

DELPHI

DELPHI PACKARD ELECTRICAL/ELECTRONIC ARCHITECTURE
Chennai, India

COPYRIGHT 2018 DELPHI CORPORATION AND/OR ITS AFFILIATES.
ALL RIGHTS RESERVED.

THIS DRAWING IS THE PROPERTY OF DELPHI CORPORATION AND CONTAINS DELPHI CONFIDENTIAL INFORMATION. THE REPRODUCTION, DISTRIBUTION AND UTILIZATION OF THIS DOCUMENT OR ITS RELATED CAD MATH DATA, AS WELL AS COMMUNICATION OF ANY CONTENT TO OTHERS, WITHOUT EXPRESS AUTHORIZATION, IS PROHIBITED.

CE PLAN EST LE PROPRIETE DE DELPHI CORPORATION ET CONTIENT DES INFORMATIONS DELPHI CONFIDENTIELLES. LA REPRODUCTION, LA DISTRIBUTION ET L'UTILISATION DE CE DOCUMENT OU DE SES DONNÉES MATHÉMATIQUES CAD, AINSI QUE LA COMMUNICATION DE TOUT CONTENU À AUTRUI, SANS AUTORISATION EXPRESSE EST INTERDITE.

		DATE
DR	DE MATOS	31OC03
APVD1	S LACOTE	19MA13
APVD2	Pascal MENARD	19MA13
APVD3		
APVD4		
APVD5		

SUBSTANCES OF CONCERN AND RECYCLED CONTENT PER DELPHI 10949001
MATIÈRES PROSCRITES ET CONTENU RECYCLABLE SELON DELPHI 10949001

MATERIAL
SEE TABLE

DRAWING NAME
6-WAY HYBRID FEMALE CONNECTOR

MINI SEALED "NM" FEMALE CONNECTOR

DRAWING NUMBER
10858268

SIZE	SCALE	FRAME NO	SHEET NO	STG	REV	N/P
A1	2:1	1 OF 1	1 OF 1	R	01	AA

Date: 22-Jan-18 Time: 15:11
User: CZSCZT4
Machine: DE-W-DE6266-CLOSER-001