NOTE	SPECIFICATIONS
1	USER'S MANUAL MVL'S REFERENCE: PU164 - ASSOCIATED PRODUCTS (CONTACT,PLUG,..) ARE DEFINED IN THE USER'S MANUAL
2	WIRE INSULATION DIAMETER :MINI=1.25 :MAXI=2.80
3	DELIVERED CONNECTOR WEIGHT : 12g
4	FEMALE/MALE CONNECTOR MATING FORCE : F < 75 N
5	COMPATIBLE WITH INTERFACE DRAWING 211FT0289 Rev. C

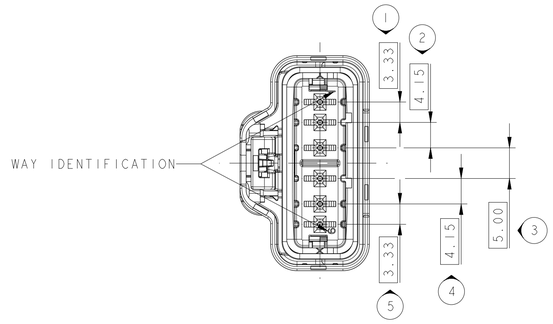

DESCRIPTION	MVL'S SERIAL REF.	DELPHI'S SERIAL REF. (c)	MATERIAL	COLOUR
REAR GRID	S583700	33512023	PBT GF15	BLACK
FEMALE HOUSING	S773700	33511996	PBT GF15	BLACK
TPA	S014700	33506939	PBT GF15	BROWN
	S904700	33512008		GREEN
	S804700	33512007		YELLOW
	S114700	33512010		RED
	S214700	33512011		PURPLE
CPA	S683700	33512015	PBT GF15	ORANGE
MAT SEAL	S693700	33501745	SILICONE	GREY
INTERFACIAL SEAL	S793700	33501738	SILICONE	BLUE

SECTION LOCAL B-B

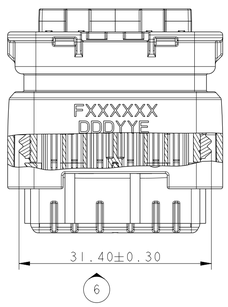

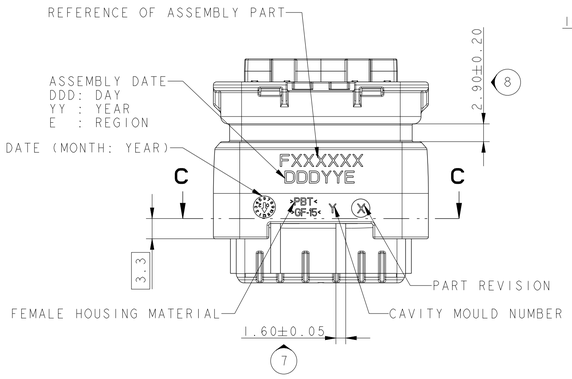

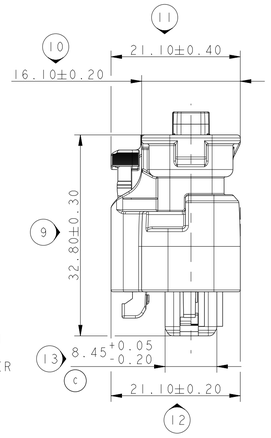

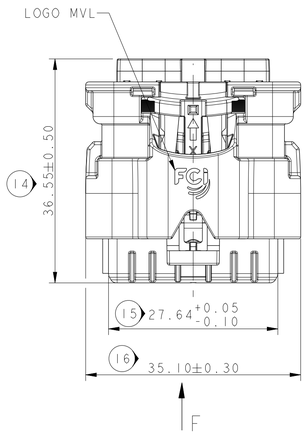

SECTION A-A

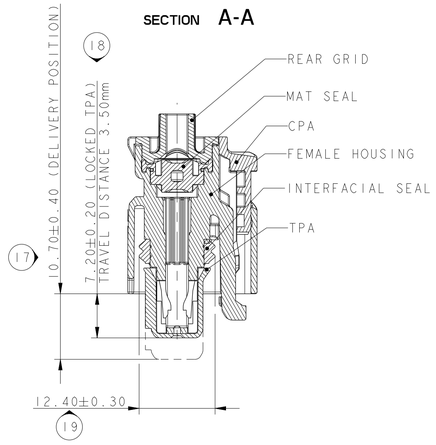

SECTION C-C

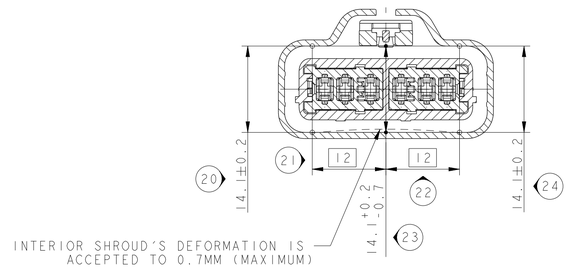

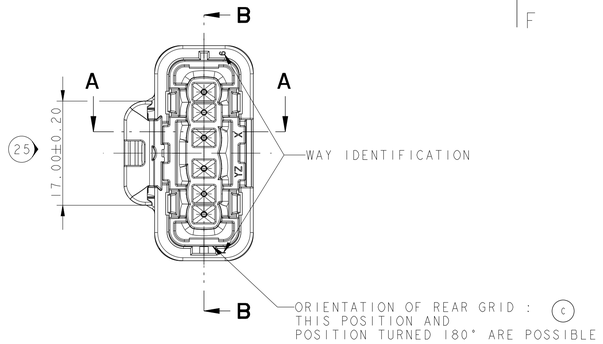

3D VIEW

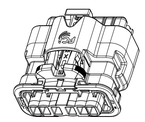

SCALE 1:1
BROWN CODING DRAWN

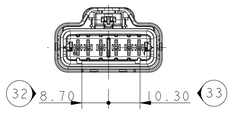

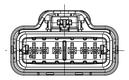

VIEW F
TOLERANCES ±0.05
SCALE 1:1

RED coding	PURPLE coding	-	COLOUR CODING
F943700	F053700	-	PART NUMBER (MVL)
A	A	-	PART REVISION (MVL)
33502275	33511993	-	PART NUMBER (DELPHI)
01	01	-	PART REVISION (DELPHI)

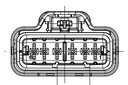

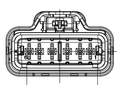

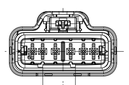

VIEW F
TOLERANCES ±0.05
SCALE 1:1

BROWN coding	GREEN coding	YELLOW coding	COLOUR CODING
F843700	F743700	F643700	PART NUMBER (MVL)
A	A	A	PART REVISION (MVL)
13846922	13935410	13885362	PART NUMBER (DELPHI)
01	01	01	PART REVISION (DELPHI)

OVERALL DIMENSION TO BE USE FOR MATING/UNMATING

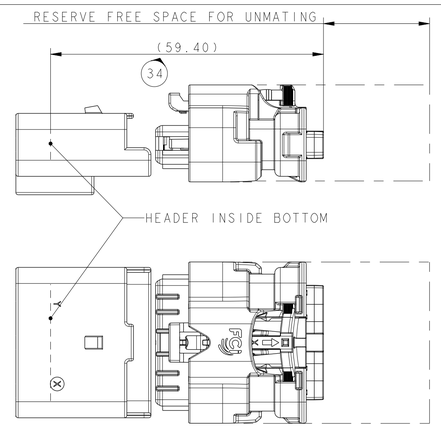

FOR INFORMATION ONLY

OVERALL DIMENSION MATTED ON HEADER
SEE NOTE 5

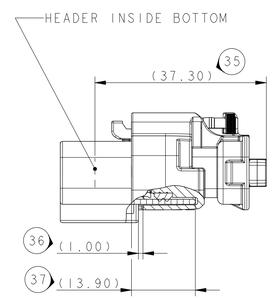

FOR INFORMATION ONLY

ECN NO. NUMERO ECN	POSITION POSITION	CHANGE DESCRIPTION MODIFICATION
-	-	
-	G 11	DIMENSION 8.45 ± 0.05 BECAME 8.45 +0.05/-0.2
ECR-13-363	LM 6-7	DELPHI REFERENCE ADDED IN THE TABLE
	D 8-10	NOTE ADDED FOR REAR GRID
	-	KEYS OF POLARIZATION OF REAR GRID ARE SUPPRESSED

OLD REVISIONS ANCIENS INDICES

PRODUCT SPEC. SPECIF. PRODUIT: -
PACKAGING SPEC. SPECIF. EMBALLAGE: -
APPLICATION SPEC. SPECIF. APPLICATION: -

COPYRIGHT DELPHI CORPORATION AND/OR ITS AFFILIATES. ALL RIGHTS RESERVED. REVISED
THIS DRAWING IS THE PROPERTY OF DELPHI CORPORATION AND CONTAINS DELPHI CONFIDENTIAL INFORMATION. THE REPRODUCTION, DISTRIBUTION AND UTILIZATION OF THIS DOCUMENT OR ITS RELATED CAD MODEL DATA, AS WELL AS COMMUNICATION OF ANY CONTENT TO OTHERS, WITHOUT EXPRESS AUTHORIZATION, IS PROHIBITED.
CE PLAN EST LA PROPRIETE DE DELPHI CORPORATION ET CONTIENT DES INFORMATIONS DELPHI CONFIDENTIELLES. LA REPRODUCTION, LA DISTRIBUTION ET L'UTILISATION DE CE DOCUMENT OU DE SES DONNEES MATHEMATIQUES CAO, AINSI QUE LA COMMUNICATION DE TOUT CONTENU A AUTRUI, SANS AUTORISATION EXPRESSE, EST INTERDITE.

TOLERANCES TOLERANCES: ±0.1 ±2°
MATERIAL : MATIERE : SEE TABLE
SURFACE FINISH ETAT DE SURFACE: -
COUNTERPART N° CONTRE PARTIE N°: -
COLOUR : COULEUR : SEE TABLE
DO NOT MEASURE DRAWING NE PAS PRENDRE DE COTES
TOOL NO. OUTIL N°: -
ECO Loc. Code CODE B.E.: FE

DELPHI-PACKARD ELECTRICAL/ELECTRONIC ARCHITECTURE EPERNON, FRANCE

ISO PROJECTION PROJECTION ISO
DIMENSION IN MILLIMETERS DIMENSIONS EN MILLIMETRES

CAD SYSTEM pro / eng.
DWG SIZE FORMAT A1

	DATE DATE	NAME NOM
CREATED BY CREE PAR	2013/02/20	V.CHOCKALINGAM
MODIFIED BY MODIF. PAR	2014/07/09	Lydie DIAZ
CHECKED BY VERIF. PAR	2014/07/14	S.LACOTE
APPROVED BY APPR. PAR	2014/07/14	O.GOLETTO

TITLE DESIGNATION: 6-WAY FEMALE CONNECTOR
PROJECT PROJET: SENSOMATE SICMA 15
ESR NO. NUMERO ESR: EU-080210
CAT. NO. NUMERO CAT: -
FILE NAME NOM DE FICHIER: PC0816827
DOCUMENT UNDER POS CONTROL NO MODIFICATION ALLOWED OUTSIDE
DOCUMENT GERE SOUS P.D.S. PAS DE MODIFICATION EN DEHORS

DRAWING NUMBER REF. PLAN: PCC0816827
REV. IND.: C
STATE ETAT: SERIAL RELEASED
PART NUMBER REF. ARTICLE: See Table
REV. IND.: -
SHEET FEUILLE 1 of / sur 1
SCALE ECH. 1:1
APPROVAL LEVEL NIV. D'APPROBATION -

EUR C04 112 F29