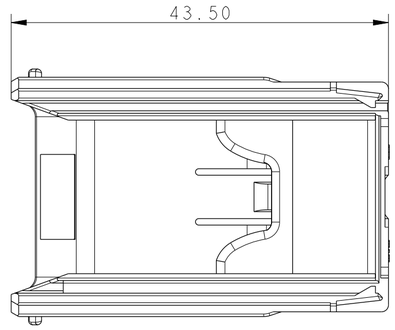

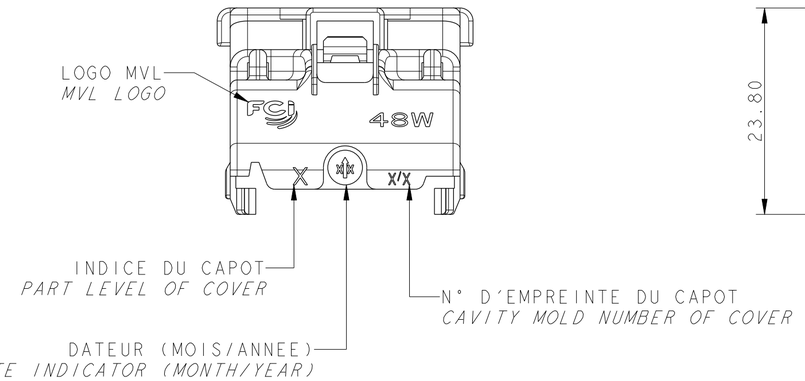

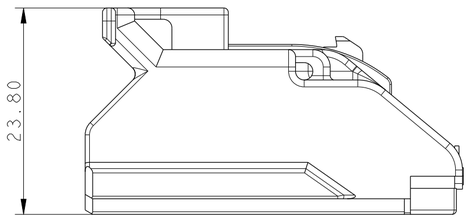

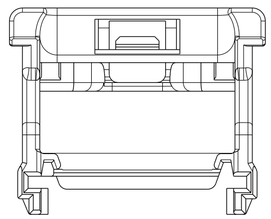

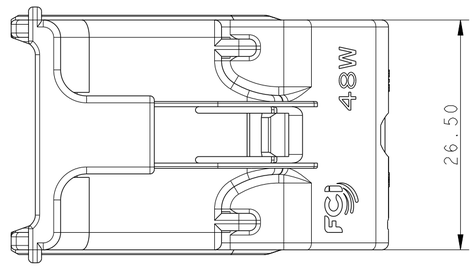

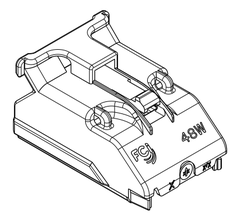

SCALE 1:1

SPECIFICATION DE CONDITIONNEMENT
PACKAGING SPECIFICATION

FE PA 06 013

CAHIER DES CHARGES
SPECIFICATION

NF R 13-462
FE PS 07 023

MISE EN OEUVRE / *APPLICATION SPECIFICATION*

DOSSIER DE PRECONISATION / *USER'S MANUAL* : PU 192

CAPOT/COVER MVL REF. P/N	CAPOT/COVER MVL REV. REV.	CAPOT/COVER DELPHI REF. P/N	CAPOT/COVER DELPHI REV. REV.	MODULE MODULE	CODAGE CODING	ETANCHEITE SEALING	SORTIE FAISEAU WIRING OUT	MVL REF P/N	MVL IND. REV.	DELPHI REF P/N	DELPHI IND. REV.
PPI0001524	B	33500794	01	48 VOIES VERSION A 48 WAY VERSION A	NOIR BLACK	NON ETANCHE UNSEALED	GAUCHE LEFT	-	B	33404758	01
							DROIT RIGHT	-	B	33404759	01
						ETANCHE SEALED	GAUCHE LEFT	-	B	33404756	01
							DROIT RIGHT	-	B	33404757	01
					GRIS GREY	NON ETANCHE UNSEALED	GAUCHE LEFT	-	B	33404762	01
							DROIT RIGHT	-	B	33404763	01
						ETANCHE SEALED	GAUCHE LEFT	-	B	33404760	01
							DROIT RIGHT	-	B	33404761	01
					MARRON BROWN	NON ETANCHE UNSEALED	GAUCHE LEFT	-	B	33404764	01
							DROIT RIGHT	-	B	33404765	01
						ETANCHE SEALED	GAUCHE LEFT	PPI0001498	B	33500501	01
							DROIT RIGHT	PPI0001499	B	33500502	01

PRODUITS ASSOCIES / *ASSOCIATED PARTS*

14-06201	-	-
	-	-
	-	-
	-	-
	-	CREATION

ECN-NO. *NUMERO ECN*	POSITION *POSITION*	CHANGE DESCRIPTION *MODIFICATION*

PRODUCT SPEC. *SPECIF. PRODUIT*: SEE TABLE
PACKAGING SPEC. *SPECIF. EMBALLAGE*: SEE TABLE
APPLICATION SPEC. *SPECIF. APPLICATION*: SEE TABLE

COPYRIGHT DELPHI CORPORATION AND/OR ITS AFFILIATES. ALL RIGHTS RESERVED. REVISED
THIS DRAWING IS THE PROPERTY OF DELPHI CORPORATION AND CONTAINS DELPHI CONFIDENTIAL INFORMATION. THE REPRODUCTION, DISTRIBUTION AND UTILIZATION OF THIS DOCUMENT OR ITS RELATED CAD MATH DATA, AS WELL AS COMMUNICATION OF ANY CONTENT TO OTHERS, WITHOUT EXPRESS AUTHORIZATION, IS PROHIBITED.
CE PLAN EST LA PROPRIETE DE DELPHI CORPORATION ET CONTIENT DES INFORMATIONS DELPHI CONFIDENTIELLES. LA REPRODUCTION, LA DISTRIBUTION ET L'UTILISATION DE CE DOCUMENT OU DE SES DONNEES MATHEMATIQUES CAO, AINSI QUE LA COMMUNICATION DE TOUT CONTENU A AUTRUI, SANS AUTORISATION EXPRESSE, EST INTERDITE.

TOLERANCES *TOLERANCES*: ±0.3 ±2° -
MATERIAL : *MATIERE* : PBT GF 15
SURFACE FINISH *ETAT DE SURFACE*
COUNTERPART Nr. *CONTRE-PARTIE N°*
COLOUR : *COULEUR* : NOIR / BLACK
DO NOT MEASURE DRAWING *NE PAS PRENDRE DE COTES*
TOOL NO. *OUTIL N°*
ECO Loc. Code *CODE B.E.* FE

	DATE	NAME
CREATED BY *CREE PAR*	2014/06/10	S LACOTE
MODIFIED BY *MODIF. PAR*	2014/06/12	S LACOTE
CHECKED BY *VERIF. PAR*	2014/06/12	F FAURIE
APPROVED BY *APPR. PAR*	2014/06/12	Pascal MENARD

FILE NAME *NOM DE FICHIER* PCC0845627
DOCUMENT UNDER PDS CONTROL *DOCUMENT GERE SOUS P.D.S.*
NO MODIFICATION ALLOWED OUTSIDE *PAS DE MODIFICATION EN DEHORS*

TITLE *DESIGNATION*: COVER 48W VERSION A GENERIC
PROJECT *PROJET*: CMC PROJECT
ESR NO. *NUMERO ESR*
CAT. NO. *NUMERO CAT*

DELPHI
DELPHI PACKARD ELECTRICAL/ELECTRONIC ARCHITECTURE
EPERNON, FRANCE

CAD SYSTEM: pro / eng.
ISO PROJECTION *PROJECTION ISO*
DIMENSION IN MILLIMETERS *DIMENSIONS EN MILLIMETRES*
DWG SIZE *FORMAT*: A2
DRAWING NUMBER *REF. PLAN*: PCC0845627
REV. *IND.*: A
APPROVAL LEVEL *NIV. D'APPROBATION*: -
STATE *ETAT*: SERIAL RELEASED
SHEET *FEUILLE*: 1 of 1 sur 1
PART NUMBER *REF. ARTICLE*: PPI0001524
REV. *IND.*: B
SCALE *ECH.*: 2:1

EUR C04 112 F29 PDS