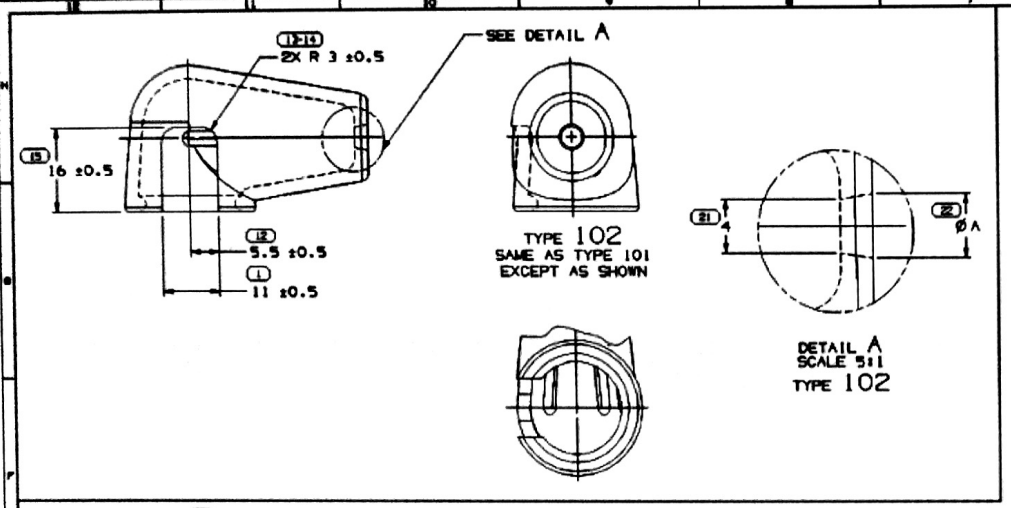

SYMBOL DEFINITION			MISSING NUMBERS
A DIMENSION WITHOUT AN INSPECTION REPORT SYMBOL ◯ DOES NOT REQUIRE INSPECTION. IT MAY BE CONTROLLED ON AN INDIVIDUAL COMPONENT DRAWING.	TOTAL NO. OF SYMBOLS ON DRAWING	19	
	LAST NO. USED	22	

DOC STATUS					ZONE	REVISION HISTORY	AUTH	DR	APVD 1	APVD 2
DATE	STS	REV	N/P	CHG						
21DE00	R	01	-	-		ALL PARTS - REDRAWN TO PD, ADDED RIBS & REVISED HOLE CONSTRUCTION	282963	JLZ	RCH	RC
21DE00	R	02	-	-		12146809 - UPDATED PDM ATTRIBUTES; 12146808 & 12146810 - R 0.75 WAS 1.25	284828	RCH	RCH	RC
21DE00	R	03	-	-		ALL PARTS - REVISED HOLE CONSTRUCTION	285328	RCH	RCH	RC
12SE01	R	04	-	-		ALL PARTS - UPDATED PDM ATTRIBUTES	211668	RCH	RCH	LA
13DE01	R	05	-			PROCESS SENSITIVE DIMENSION 9 WAS 2	218574	[illegible]	[illegible]	AL
21MY03	R	06	-	-		12146808,10 - REVISED CABLE OD DIM	241451	LFS	RVP	MB
15JN04	-	07	-	-		15497352 - ADDED TO TAXI AND RELEASED	255953	AKJ	AKJ	BER
30JN04	R	08	-	-		15497352 - DIM "A" WAS 7.88	256394	ADK	ADK	BR
04MD04	R	09	-	-		ALL PARTS - 17.5 +/-0.2 WAS 17.5; 15497352 - 9.5 +/-0.2 WAS 9.5	260973	[illegible]	[illegible]	BR
13DE05	R	10	-	-		12146810 - ADDED DETAIL A & DIMENSION A WAS 4.58	275635	MAC	MAC	JS
10DC06	R	11	-	-		ALL PARTS - REVISED MAT'L SPEC	285237	RTV	AMB	JAS
08DE06	R	12	-	-		ALL PARTS - Ø 16 +0.5/-0.3 WAS Ø 16	287319	MM	MM	JAS
06MD07	R	13	-	-		ALL PARTS - ADDED NOTE #4 WALL THICKNESS	402835	MM	MM	MDM

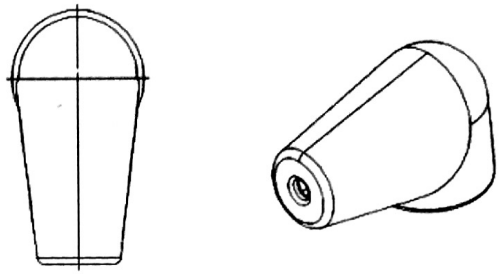

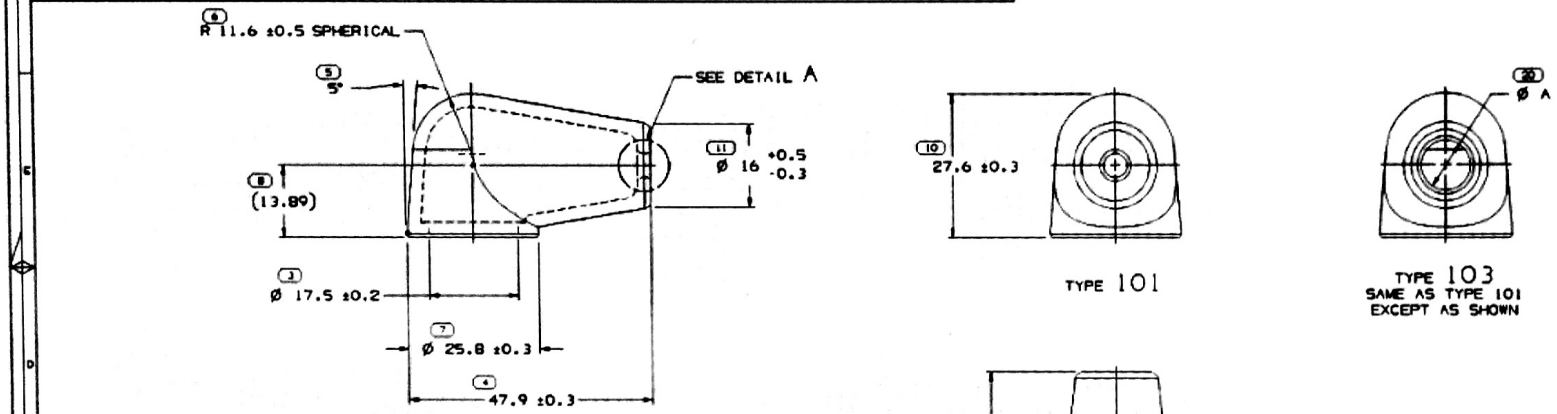

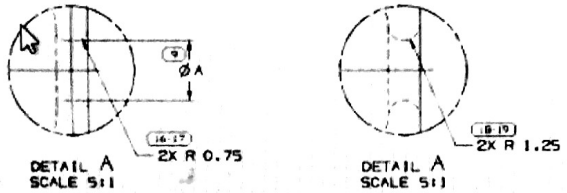

REGULAR CONSTRUCTION OPTIONAL CONSTRUCTION

NOTES

1. UNLESS OTHERWISE SPECIFIED AND/OR INDICATED:

   DIMENSIONS ARE TO FACE OF VIEW SHOWN AND AUTOMATICALLY ROUNDED BY COMPUTER FOR INSPECTION (SEE MATH MODEL FOR PRECISE DIMENSIONS). FOR ALL OTHER DIMENSIONS NOT SHOWN BUT REQUIRED FOR TOOL BUILD, SEE MATH MODEL FOR PRECISE TOOL PATH DATA.

2. REFERENCE MATING COMPONENTS OR EQUIVALENT:

   RING TERMINAL 12146363

3. PART SURFACE MUST BE SMOOTH AND NONPOROUS.

4. WALL THICKNESS TO BE 2.5 +0.2/-0.3 CONSTANT: UNLESS OTHERWISE NOTED.

PART NO	REV	N/P	STATUS	TYPE	SIZE MM²	OD MM	Ø A	VOL CM³
15497352	02	AD	-	103	19.0	8.01	9.5 ±0.2	8.192
12146810	06	AK	-	102	8.0 - 5.0	6.06/4.32	4.8	7.751
12146809	06	AH	-	101	19.0 - 13.0	8.01/6.63	6.3 ±0.5	8.270
12146808	06	AJ		101	8.0 - 5.0	6.06/4.32	4.58	8.243
					CABLE			

PART DRAWING

SEE CHART

UNLESS OTHERWISE SPECIFIED

ALL DIMENSIONS ARE IN MILLIMETERS

THIRD ANGLE PROJECTION

DO NOT SCALE USE MATH DATA

NX

DELPHI

DELPHI PACKARD ELECTRICAL/ELECTRONIC ARCHITECTURE
WARREN, OH

		DATE
DR		
APVD1	J. ZAMUDIO	21DE00
APVD2	R. CHACON	21DE00
APVD3	R. CORZAS	22DE00
APVD4		
APVD5		

SUBSTANCES OF CONCERN AND RECYCLED CONTENT PER DELPHI [illegible]

MATERIAL
[illegible]

DRAWING NAME
TAXI SLEV BOOT

DRAWING NUMBER
12146811

SIZE	SCALE	FRAME NO	SHEET NO	STS	REV	CHG
A1	2:1	1 OF 1	1 OF 1	R	13	-