THIRD ANGLE PROJECTION

| DOCUMENT REVISIONS | | | | |
|---|---|---|---|---|
| REV | DESCRIPTION | CO NO. | DATE | CHG/CHK |

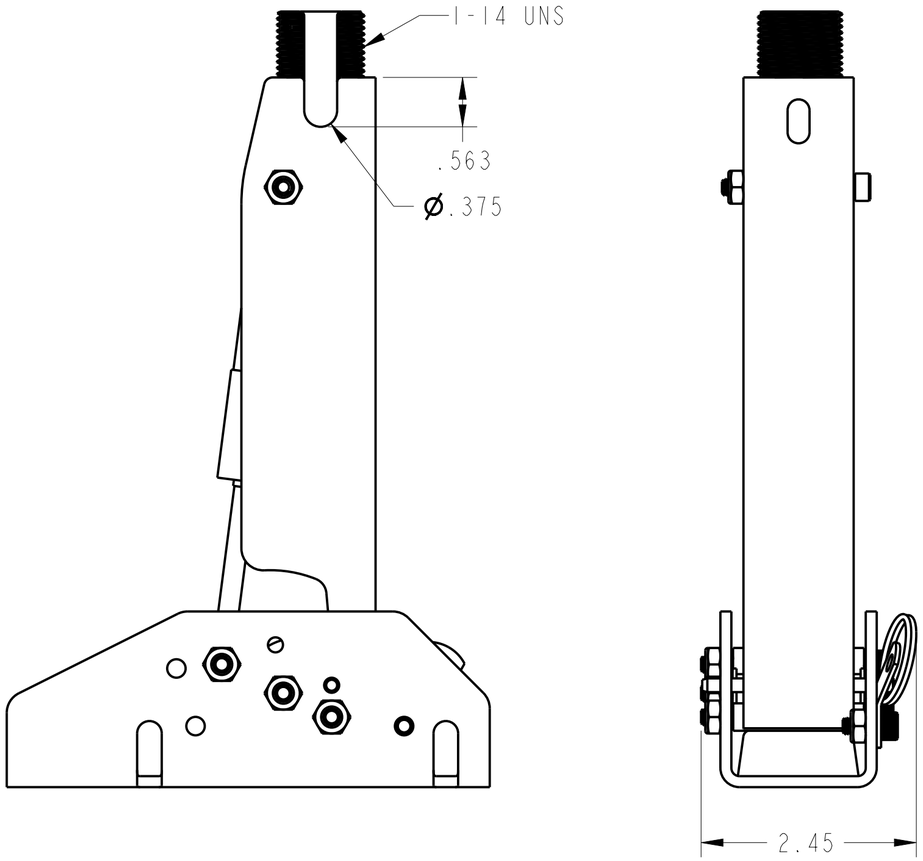


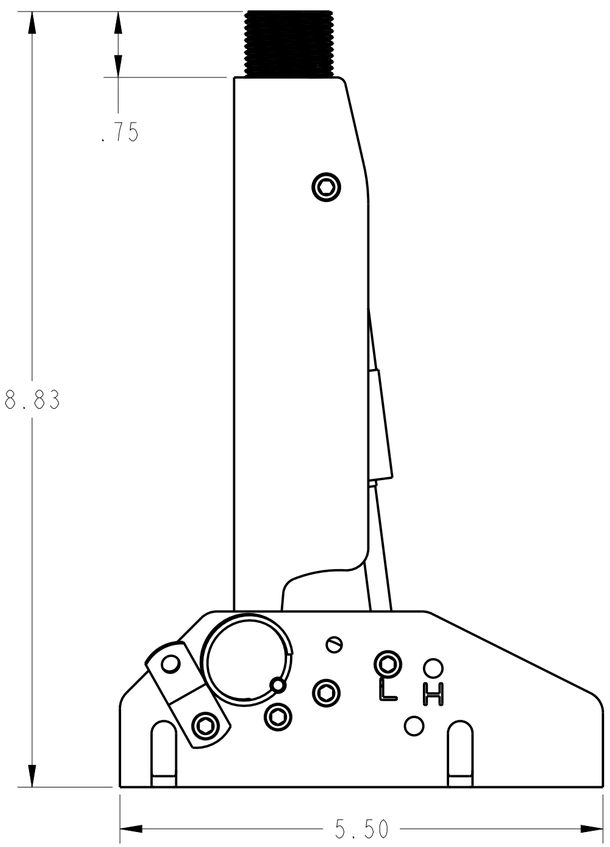

SCALE 0.500

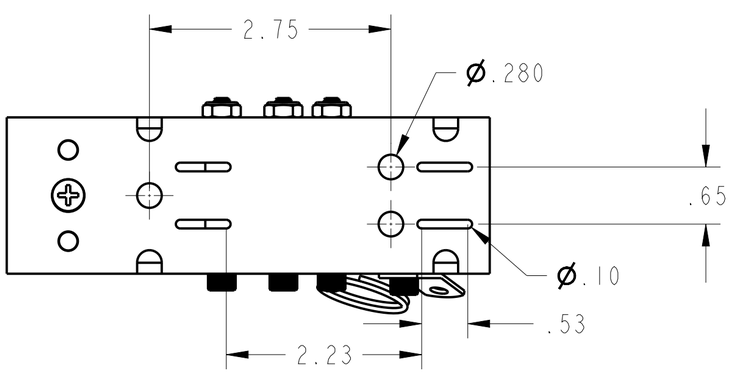


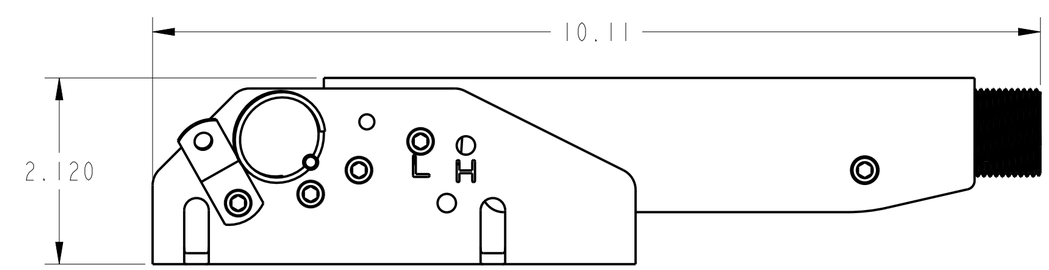


| PART NUMBER | P/N REV |
|---|---|
| | |

| UNLESS OTHERWISE SPECIFIED | SIGNATURE | DATE |
|---|---|---|
| | | |

AIRMAR

AIRMAR TECHNOLOGY CORPORATION
35 MEADOWBROOK DR.
MILFORD, NH 03055-4613 USA
TEL:603-673-9570 FAX: 603-673-4624

TITLE

MATERIAL

| SIZE | DOC NUMBER | DOC REV |
|---|---|---|
| C | | |

THIS DOCUMENT AND THE DATA DISCLOSED HEREIN OR HEREWITH IS NOT TO BE REPRODUCED, USED, OR DISCLOSED IN WHOLE OR IN PART TO ANYONE WITHOUT THE PERMISSION OF AIRMAR.

CRITICAL DIMENSION (REF) DO NOT SCALE DRAWING