PART NUMBER	KEY ROTATION
CF-020400-62N	N
CF-020400-62A	A

REVISIONS M		
LTR	DESCRIPTION	DATE
X-0	PRELIMINARY DESIGN	04/04/2023
X-1	ADDED EXAMAX RCPT UPDATED I/O CHART	05/03/2023
X-2	UPDATED I/O CHART, CHANGED PHY1 AND PHY2 TO DEBUG	05/10/2023
X-3	UPDATED I/O CHART	06/06/2023

DOCUMENT NO. CF-020400-62X SHEET 1 OF 2 REV. X-3

PRELIMINARY DRAWING REVISION: X-3

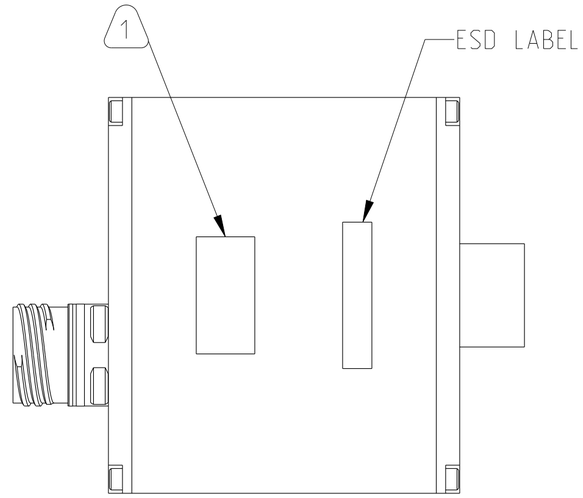

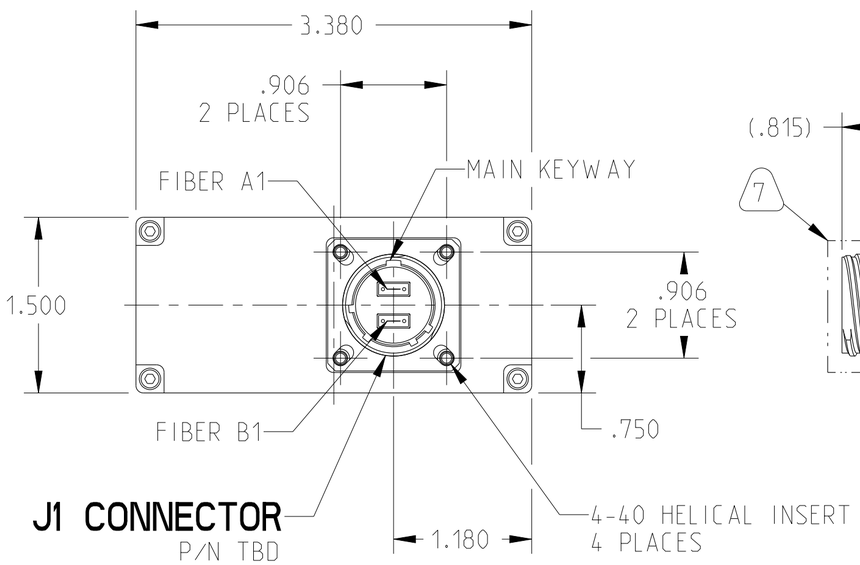

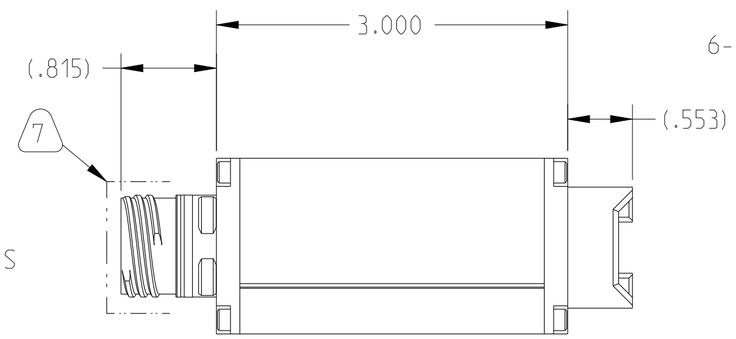

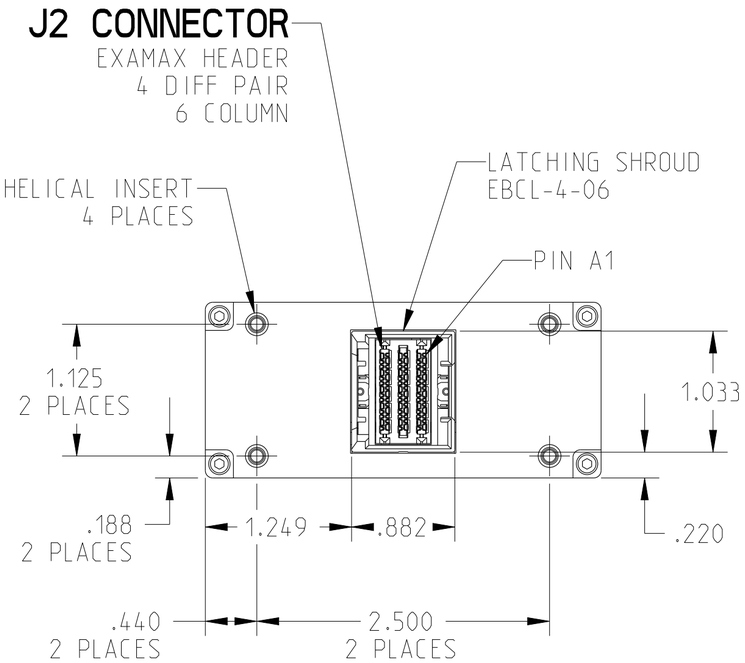

PRELIMINARY DRAWING REVISION: X-3

ATTENTION
OBSERVE PRECAUTIONS FOR HANDLING ELECTROSTATIC SENSITIVE DEVICES

SEE SHEET 2

NOTES:

THE USE OF THIS DOCUMENT IS UNLIMITED. HOWEVER, DOCUMENTS REFERENCED HEREON MAY CONTAIN LIMITED RIGHTS DATA.

NONE
NEXT ASSEMBLY

CREO INFORMATION
CREO Model Used: CF-020400-62X.ASSEM
Drawing Name: CF-020400-62X

UNLESS OTHERWISE SPECIFIED
LINEAR DIMENSIONS ARE IN INCHES
TOLERANCES:
.XXXX = ±.0005 ANGLES= ±2°
.XXX = ±.010
.XX = ±.03
.X = ±.1
DIM.& TOL. PER ASME Y14.5M;
DRM PER MIL-STD-31000;
OTHER Amphenol Stds. PER 9-3800
LEGENDS:
=FLAG NOTE CALL OUT
REFERENCE ONLY

SPECIFICATIONS
MATERIAL SPEC.
NONE
PROCESS SPEC.
9-9172-3

POS	QTY	PART NUMBER	DESCRIPTION	NOTE

PARTS LIST

APPROVALS		DATE
PREPARED BY	W. LEE	01-May-23
ENGINEER IN CHARGE	W. LEE	
DESIGN MANAGER	J. ROTHROCK	
DESIGN ACTIVITY GROUP	CI	

THIRD ANGLE PROJECTION

AMPHENOL CORPORATION
40-60 DELAWARE AVENUE
SIDNEY, N.Y. 13838

MEDIA CONVERTER
100GBase-SR4 FIBER / 100GBase-KR4 COPPER
2 CHANNEL

SIZE	CAGE CODE	DOCUMENT NO.	REV.
C	77820	CF-020400-62X	X-3

SCALE: 1.0 REF. CF-020401-6XX SHEET 1 OF 2

DOCUMENT NO. CF-020400-62X SHEET 1 OF 2 REV. X-3

FORMAT: C-U_E-1_PRELIMINARY

Eng PDM Information For Reference Only
REVISION -
VERSION 3

DOCUMENT NO. CF-020400-62X SHEET 1 OF 2 REV. X-3

J1 I/O CHART (9)

ID	SIGNAL	ID	SIGNAL
A1	100G-SR4_CH1_TX1	B1	100G-SR4_CH2_TX1
A2	100G-SR4_CH1_TX2	B2	100G-SR4_CH2_TX2
A3	100G-SR4_CH1_TX3	B3	100G-SR4_CH2_TX3
A4	100G-SR4_CH1_TX4	B4	100G-SR4_CH2_TX4
A5	N/C	B5	N/C
A6	N/C	B6	N/C
A7	N/C	B7	N/C
A8	N/C	B8	N/C
A9	100G-SR4_CH1_RX4	B9	100G-SR4_CH2_RX4
A10	100G-SR4_CH1_RX3	B10	100G-SR4_CH2_RX3
A11	100G-SR4_CH1_RX2	B11	100G-SR4_CH2_RX2
A12	100G-SR4_CH1_RX1	B12	100G-SR4_CH2_RX1

J2 I/O CHART (9)

	1	2	3	4	5	6
A	GND	GND	GND	GND	GND	GND
B	GND	100G-KR4_CH1_TX3+	GND	100G-KR4_CH2_TX3+	GND	RESET
C	100G-KR4_CH1_TX1+	100G-KR4_CH1_TX3-	100G-KR4_CH2_TX1+	100G-KR4_CH2_TX3-	POWER 12V	RESET_RTN
D	100G-KR4_CH1_TX1-	GND	100G-KR4_CH2_TX1-	GND	POWER 12V	GND
E	GND	100G-KR4_CH1_TX4+	GND	100G-KR4_CH2_TX4+	GND	SDA
F	100G-KR4_CH1_TX2+	100G-KR4_CH1_TX4-	100G-KR4_CH2_TX2+	100G-KR4_CH2_TX4-	POWER 12V	SCL
G	100G-KR4_CH1_TX2-	GND	100G-KR4_CH2_TX2-	GND	POWER 12V	GND
H	GND	100G-KR4_CH1_RX4-	GND	100G-KR4_CH2_RX4-	GND	MDIO
I	100G-KR4_CH1_RX2-	100G-KR4_CH1_RX4+	100G-KR4_CH2_RX2-	100G-KR4_CH2_RX4+	POWER 12V	MDC
J	100G-KR4_CH1_RX2+	GND	100G-KR4_CH2_RX2+	GND	POWER 12V	GND
K	GND	100G-KR4_CH1_RX3-	GND	100G-KR4_CH2_RX3-	GND	N/C
L	100G-KR4_CH1_RX1-	100G-KR4_CH1_RX3+	100G-KR4_CH2_RX1-	100G-KR4_CH2_RX3+	POWER 12V	N/C
M	100G-KR4_CH1_RX1+	GND	100G-KR4_CH2_RX1+	GND	POWER 12V	GND
N	GND	GND	GND	GND	GND	GND

11. J1 CONNECTOR AND HOUSINGS ARE BLACK ZINC NICKEL PLATED ALUMINUM ALLOY.

10. FIBER LINES SHALL BE 850nm SIGNAL COMPATIBLE 50/125 MULTI MODE FIBER.

(9.) ALL TX AND RX SPECIFIED ON I/O CHART ARE FROM THE PERSPECTIVE OF CF-020400-62X ASSEMBLY.

8. MARKING ON LABEL MAY DIFFER FROM DRAWING BASED ON CUSTOMER SPECIFIC ORDER REQUIREMENTS.

(7.) PROTECTIVE CAP SHALL BE INSTALLED PRIOR TO SHIPPING.

6. ASSEMBLY CONTAINS ELECTROSTATIC DISCHARGE (ESD) SENSITIVE COMPONENTS. ASSEMBLY SHALL BE HANDLED, PACKAGED, AND SHIPPED TO MEET REQUIREMENTS OF ANSI/ESD-S-20.20 AND IPC-A-610.

5. J2 MATES WITH SAMTEC ECBF CABLE ASSEMBLY (SIZE: 4 DIFF X 6 COLUMN).

4. J1 MATES WITH TBD CONNECTOR P/N.

3. OPERATING TEMPERATURE: -40°C TO +85°C
STORAGE TEMPERATURE: -40°C TO +85°C

2. PACKAGE PER PRODUCTION PROCESS SHEET.

(1.) MARK LABEL WITH "AMPHENOL", PART NUMBER, AND SEVEN DIGIT SERIAL NUMBER AND ATTACH ON INDICATED SURFACE. SERIAL NUMBER PER 9-9172-3.

EXAMPLE: FOR ASSEMBLY NUMBER 3 BUILT ON MAY 5 (WEEK 18), 2023.

AMPHENOL
CF-020400-62N
2318003

PRELIMINARY DRAWING REVISION: X-3

PRELIMINARY DRAWING REVISION: X-3

NOTES:

THE USE OF THIS DOCUMENT IS UNLIMITED.
HOWEVER, DOCUMENTS REFERENCED HEREON
MAY CONTAIN LIMITED RIGHTS DATA.