NOTES:

1. MATERIALS AND FINISHES:
   SOLDER NUT - BRASS, GOLD PLATING
   BODY - BRASS, WHITE BRONZE PLATING
   CONTACT - PHOSPHOR BRONZE, GOLD PLATING
   INSULATOR - PTFE, NATURAL
   DISC INSULATOR - PTFE, NATURL

2. ELECTRICAL:
   A. IMPEDANCE: 50 OHMS
   B. FREQUENCY RANGE: DC - 6 GHz
   C. VSWR (RETURN LOSS): 1.3 MAX.
   D. DIELECTRIC WITHSTANDING VOLTAGE: 2500 VRMS, MIN.

3. MECHANICAL:
   A. DURABILITY: 500 CYCLES MIN.
   B. TEMPERATURE RANGE: -65°C TO +165°C

4. CONTACT PIN TO SOLDER.

5. SHOWS CABLE ENTRY DIMENSIONS.

REVISIONS

REV	DESCRIPTION	DATE	ECN	BY
NC	INITIAL RELEASE	10/23/00	-----	GRS
A	UPDATE DRAWING FORMAT; REVISE PLATING TO NEXCOTE	06/25/06	-----	GRS
C	SYNC, UPDATE DRAWING FORMAT, ADD P/N	17-May-24		SH

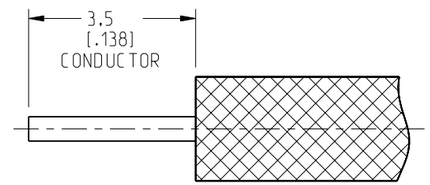

RECOMMENDED
CABLE STRIPPING DIM'S

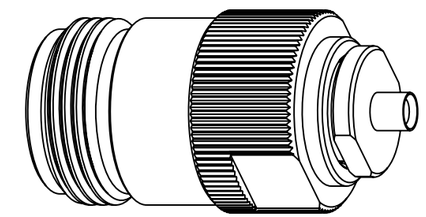

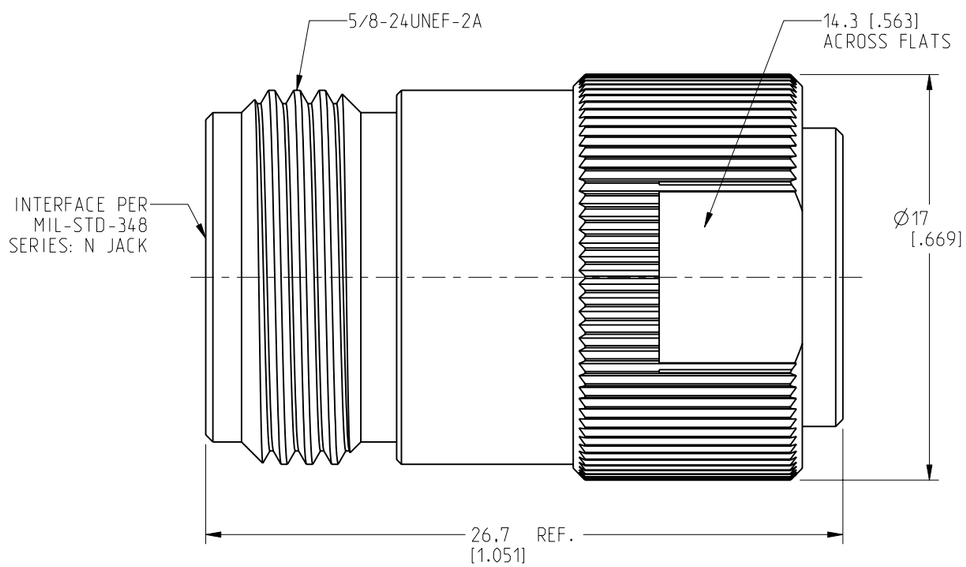

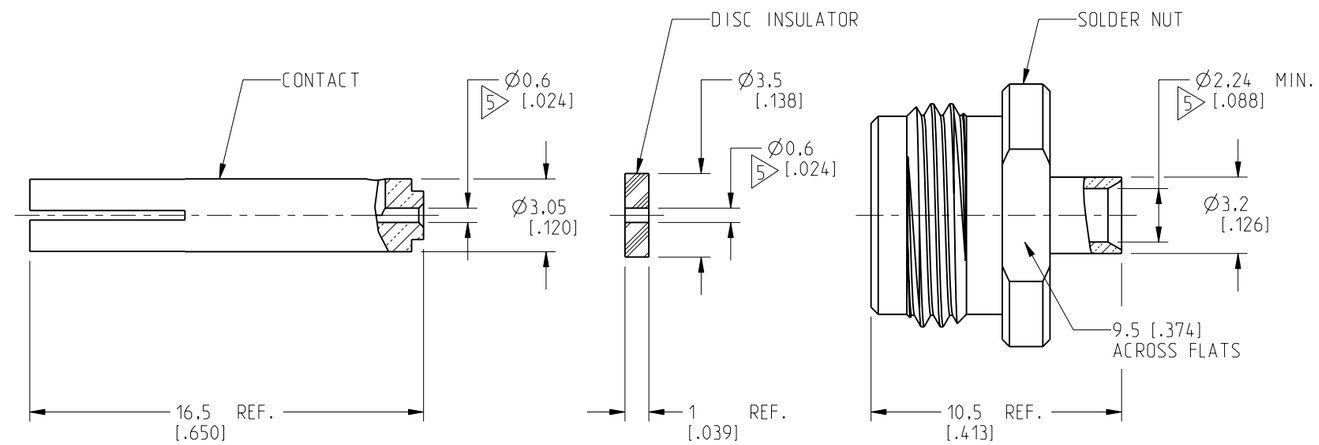

CUSTOMER OUTLINE DRAWING

ALL OTHER SHEETS ARE FOR INTERNAL USE ONLY

NOTICE: These drawings, specifications, or other data (1) are, and remain the property of Amphenol corp. (2) must be returned upon request; and (3) are confidential and not to be disclosed to any person other than those to whom they are given by Amphenol Corp. The furnishing of these drawings, specifications, or other data by Amphenol Corp., or to any other person to anyone for any purpose is not to be regarded by implication or otherwise in any manner licensing, granting rights to permitting such holder or any other person to manufacture, use or sell any product, process or design, patented or otherwise, that may in any way be related to or disclosed by said drawings, specifications, or other data.

THIRD ANGLE PROJ.

REFERENCE | EAR#

UNLESS OTHERWISE SPECIFIED
DIMENSIONS ARE METRIC [INCHES] AND TOLERANCES ARE:

<0.5mm = ±0.05mm	[<0.020 = ±0.002]
0.5 - 6mm = ±0.1mm	[>0.020 - 0.236 = ±0.004]
>6.00 - 30mm = ±0.2mm	[>0.236 - 1.181 = ±0.008]
>30.00 - 120mm = ±0.3mm	[>1.181 - 4.725 = ±0.012]

ANGLES = ±1°

MATERIAL: SEE NOTES

ENGR.1: M.ZHANG | ENGR.2: M.ZHANG | DATE: 17-May-24

TITLE: N DIRECT SOLDER JACK (FOR .085", .086" SEMI RIGID CABLE)

SHEET NO. 2 OF 2 | SCALE: 4.0:1.0

Amphenol RF

SIZE: B | DRAWING NO. N6181A1-001-AX3GT5GP-50 | ITEM NO. 036181AAD45WK5F | PART NO. 172237 | REV: C