REV.	ECN NO.	DATE	SIGN	DESCRIPTION
B	LEN13A0034	2013/10/01	Ruru	Change Logo LTW To ALTW
C	LEN14B0281	2014/10/30	Jinhai	Delete Gap

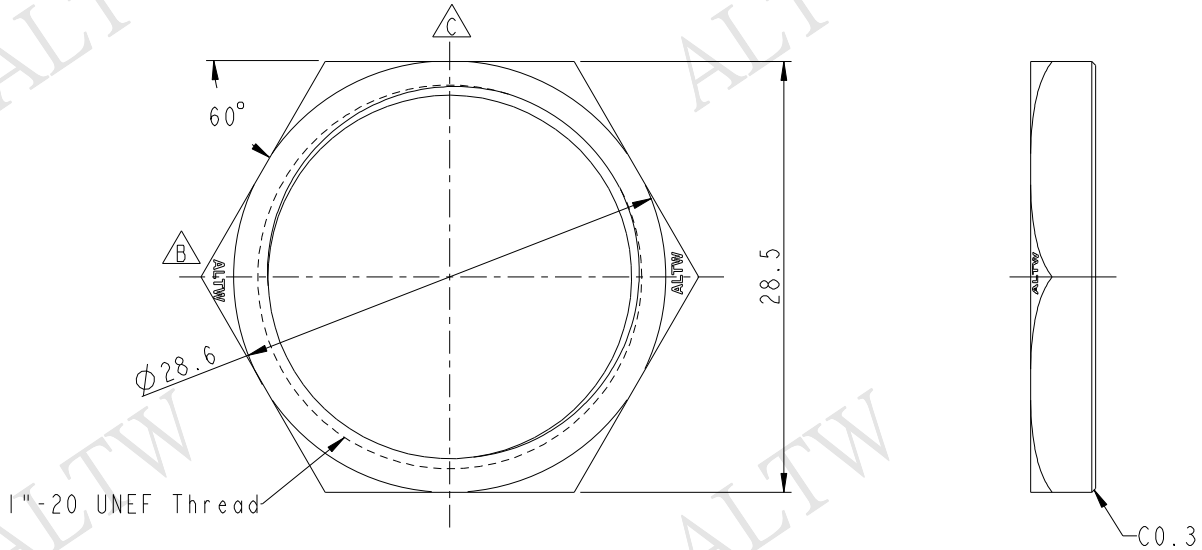

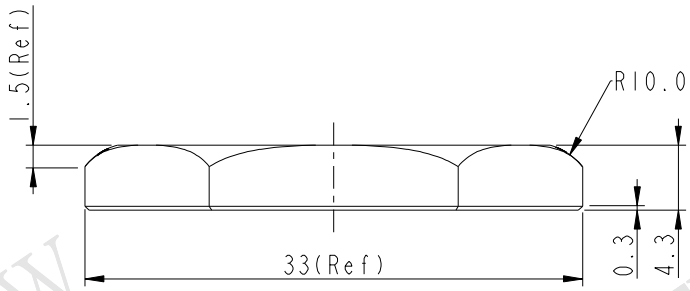

ALTW DCC. DEPT. CONFIDENTIAL 2014.11.26 ISSUED

ALTW CONFIDENTIAL 2014.10.30 R&D DEPT.

Note:
* (QC) Important Dimention
* Material: Dopont Nylon FR50, 94V0, FI or same Grade Material
* Color: Black
* Mold No.: LTW-TM127

UNIT: mm

TOLERANCE
.X ±0.25
.XX ±0.1
.XXX ±0.05
ANGLES ±1°

TITLE: Nut Panel For 18Pin Connector			
SCALE 1:1	SIZE A4	SHEET 1 OF 1	
REV. C	WC-REV. A.5	(QC): Inspection item	

Amphenol LTW
安費諾亮泰企業股份有限公司

ITEM NO ANA00010057	DRAWN BY Jinhai	DATE 2014-10-30
DWG NO ANA00010057	CHECKED BY Tom	DATE 2014-10-30
CUSTOMER ALTW	APPROVED BY Jerry	DATE 2014-10-30

FMW10702-01-02A1

THIS DOCUMENT IS SUBJECT TO CHANGE WITHOUT NOTICE. IT IS CONFIDENTIAL AND A PROPERTY OF Amphenol LTW. DISCLOSURE TO THIRD PARTY HAS TO BE AUTHORIZED BY Amphenol LTW.