ECN No.: CH20071000 3

REVISIONS		
LTR	DESCRIPTION	DATE
A	INITIAL RELEASE	
B	PART 10-639799-002 ADDS A ROUND	07-09-05
C	MODIFY THE DIMENSION	07-09-26
D	ADD PCB LAYOUT	07-10-08

DOCUMENT NO. 10-639801-000 SHEET 1 OF 1 REV. D

ORIGINAL COPY (正宗原版)
11 OCT 2007
DOCUMENT CONTROL

Devin Li 07.10.10

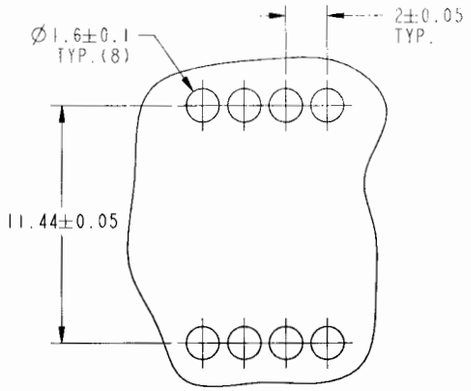

LINEAR DIMENSIONS ARE IN MM

THRU HOLES SPECIFICATION OF PCB

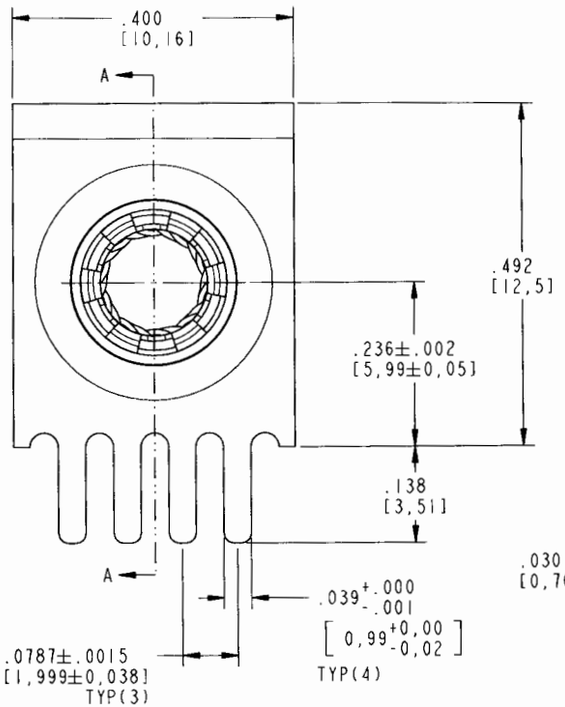

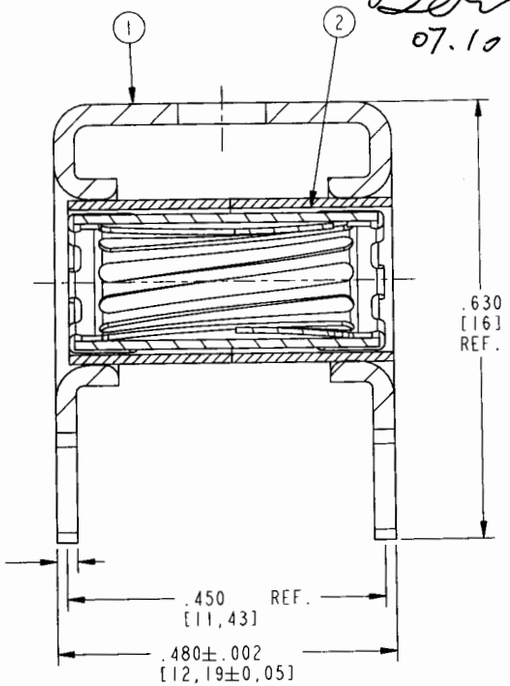

SECTION A-A

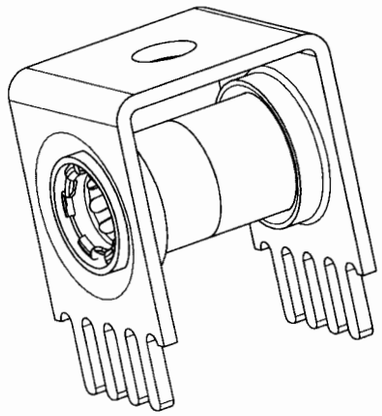

SCALE 6.000

POS	QTY	PART NUMBER	DESCRIPTION	NOTE
2	1	10-639358-001	3.6MM "SHORT" RADSOK ASSEMBLY	
1	1	10-639799-002	3.6MM PGY MOUNT HOLDER	

PARTS LIST

APPROVALS		DATE
PREPARED BY	M.UPPLEGER	
ENGINEER IN CHARGE	M.UPPLEGER	03-Sep-07
DESIGN MANAGER	J.SANDBURG	
DESIGN ACTIVITY GROUP	C & I	

THIRD ANGLE PROJECTION

AMPHENOL CORPORATION
40-60 DELAMARE AVENUE
NEWKIRK, N.Y. 10028

3.6MM RADSOK PCB MOUNT ASSEMBLY

SIZE	CAGE CODE	DOCUMENT NO.	REV.
C	77820	10-639801-000	D

SCALE: 8.0 REF: N/A SHEET 1 OF 1

UNLESS OTHERWISE SPECIFIED

LINEAR DIMENSIONS ARE IN INCHES
TOLERANCES:
.XXXX = ±.0005 ANGLES: ±2°
.XXX = ±.010
.XX = ±.03
.X = ±.1

DIM.& TOL. PER ASME Y14.5M;
DRN PER MIL-DTL-31000;
OTHER Amphenol Stds. PER 9-3800

LEGENDS:
:FLAG NOTE CALL OUT
REFERENCE ONLY

SPECIFICATIONS

MATERIAL SPEC.
N/A
-
-

PROCESS SPEC.
N/A
-
-

NOTES:

THE USE OF THIS DOCUMENT IS UNLIMITED. HOWEVER, DOCUMENTS REFERENCED HEREON MAY CONTAIN LIMITED RIGHTS DATA.

NEXT ASSEMBLY	PRO/ENGINEER INFORMATION
N/A	Pro/e Model Used: 10-639801_ASSEM
N/A	Drawing Name: 10-639801.

DOCUMENT NO. 10-639801-000 SHEET 1 OF 1 REV. D

FORMAT: C-V.E-Rev.B