DOCUMENT NO.	SHEET 1 OF 1	REV.
10-647159-08( )		A

REVISIONS

LTR	DESCRIPTION	DATE
A	INITIAL RELEASE	

PART NUMBER	ITEM #3	RADSOK FINISH	LUG FINISH	CAP FINISH
10-647159-081	10-639352-081	SILVER	TIN	TIN
10-647159-084	10-639352-084	NICKEL	TIN	TIN
10-647159-085	10-639352-085	GOLD	TIN	TIN

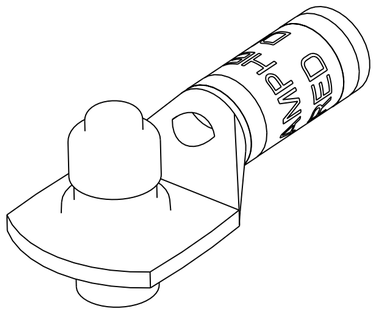

SCALE 3.000

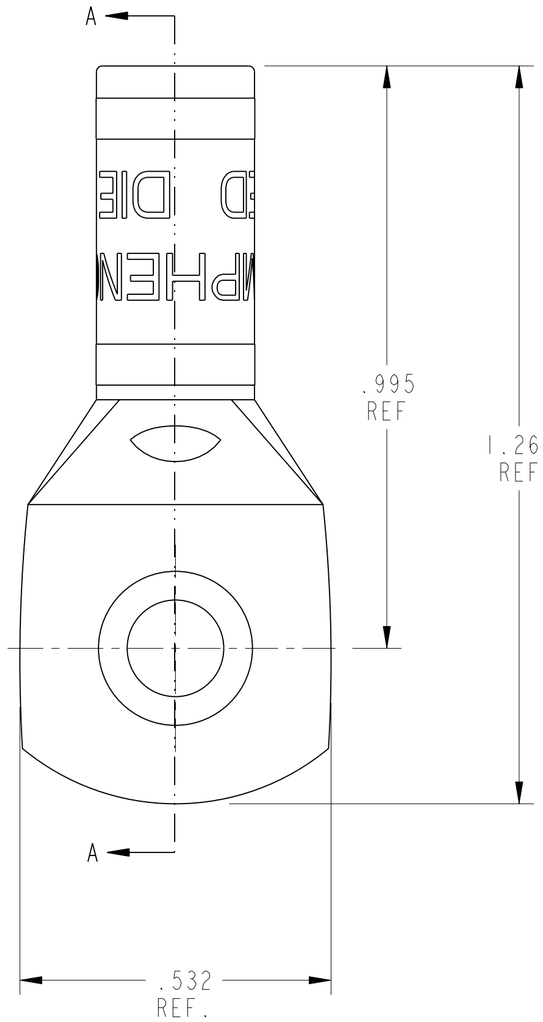

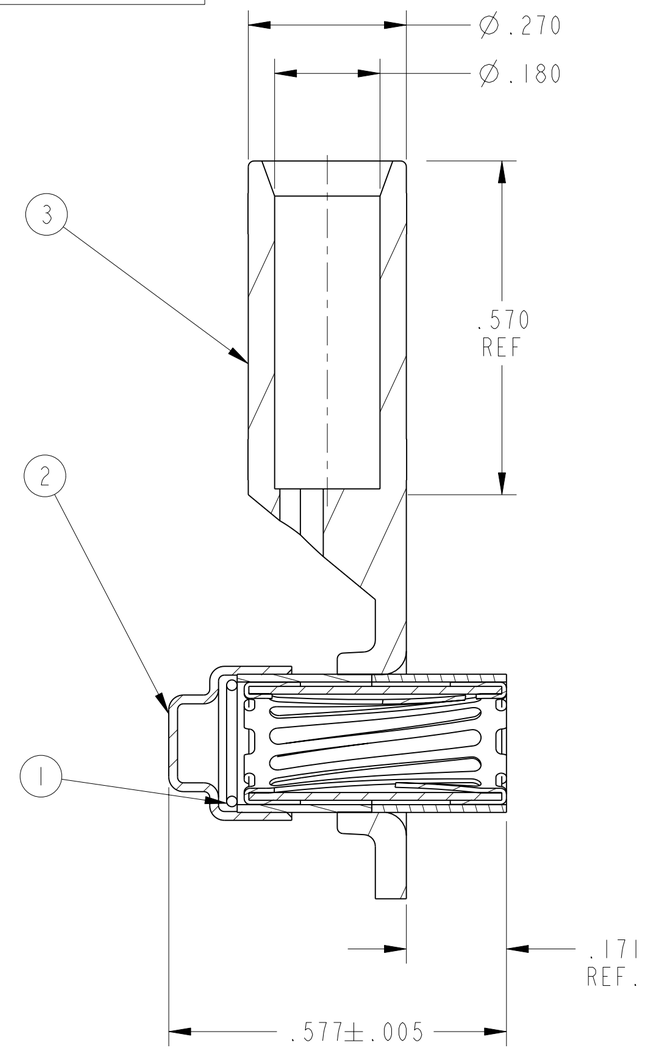

SECTION A-A

POS	QTY	PART NUMBER	DESCRIPTION	NOTE
3	1	SEE CHART	3.6MM SURLOK LUG ASSEMBLY	
2	1	10-647165-003	3.6MM SURLOK CAP	
1	1	10-647162-000	3.6MM SURLOK WIRE CLIP	

PARTS LIST

2) CRIMP BARREL SHOWN ACCEPTS #8 AWG WIRE. RECOMMENDED CRIMP TOOL: BURNDY #Y750HS,DIE #U8CRT OR EQUIV.

1) PRESS ITEM #2(CAP) ONTO ITEM #3(RADSOK) TO DIMENSION SHOWN.

NOTES:

THE USE OF THIS DOCUMENT IS UNLIMITED. HOWEVER, DOCUMENTS REFERENCED HEREON MAY CONTAIN LIMITED RIGHTS DATA.

RELEASED / Sep . 14 2006, 10:18 AM

NEXT ASSEMBLY	PRO/ENGINEER INFORMATION
N/A	Pro/e Model Used: 10-647159-08.ASSEM
10-647183	Drawing Name: 10-647159-08

UNLESS OTHERWISE SPECIFIED

LINEAR DIMENSIONS ARE IN INCHES
TOLERANCES:
.XXXX = ±.0005 ANGLES= ±2°
.XXX = ±.010
.XX = ±.03
.X = ±.1

DIM.& TOL. PER ASME Y14.5M;
DRM PER MIL-DTL-31000;
OTHER Amphenol Stds. PER 9-3800

LEGENDS:
=FLAG NOTE CALL OUT
REFERENCE ONLY

SPECIFICATIONS

MATERIAL SPEC.
N/A
-
-

PROCESS SPEC.
N/A
-
-

APPROVALS		DATE
PREPARED BY	DERIC LI	03-Aug-06
ENGINEER IN CHARGE	M.UPPLEGER	
DESIGN MANAGER	J.SANDBURG	
DESIGN ACTIVITY GROUP		

THIRD ANGLE PROJECTION

AMPHENOL CORPORATION
40-60 DELAWARE AVENUE
SIDNEY, N.Y. 13838

-
3.6MM SURLOK RADSOK SUB ASSEMBLY(8 AWG)
-

SIZE	CAGE CODE	DOCUMENT NO.	REV.
C	77820	10-647159-08( )	A

SCALE: 5.0 REF: 10-647173-01( ) SHEET 1 OF 1

DOCUMENT NO.	SHEET 1 OF 1	REV.
10-647159-08( )		A

FORMAT: C-U,E-Rev.B

IMAGED / Sep . 18 2006, 02:17 PM