CUSTOMER DRAWING

REVISIONS		
REV.	DESCRIPTION	DATE
PA1	INITIAL RELEASE	2025-06-09

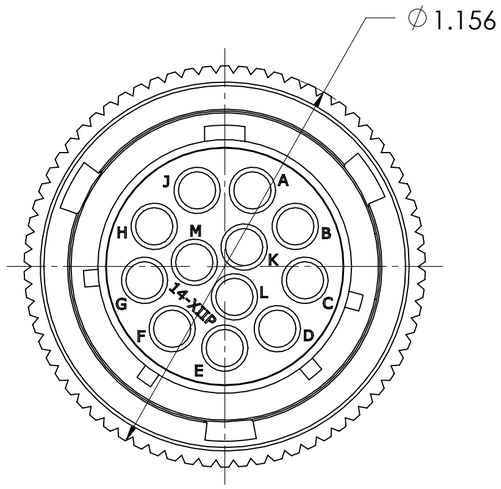

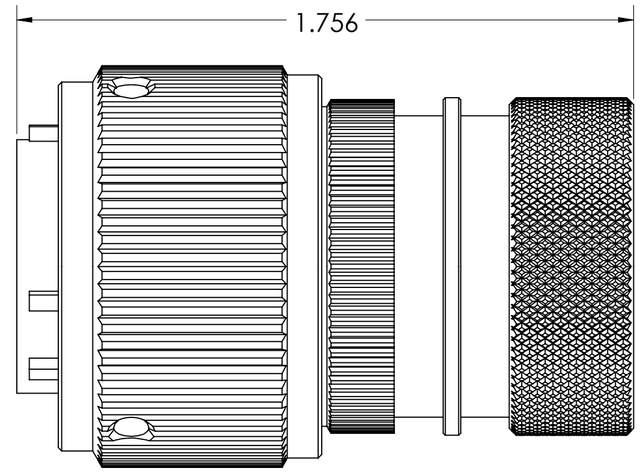

SPECIFICATION	
CURRENT RATE OF CONTACT	13 Amps
OPERATING VOLTAGE	150VAC MAX
OPERATING TEMPERATURE	-40˚C TO +125˚C
DIELECTRIC WITHSTANDING VOLTAGE	1300VAC
INSULATION RESISTANCE	1000 MEGOHMS MIN (AT 25˚C)
NUMBER OF CONTACTS	12 PIN
WATER PROOF (MATED CONDITION)	IP67 CLASS
DURABILITY	500 CYCLES
SALT SPRAY	5% NaCl, 48H

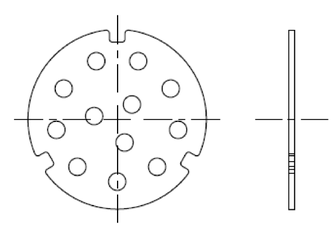

LOCATOR

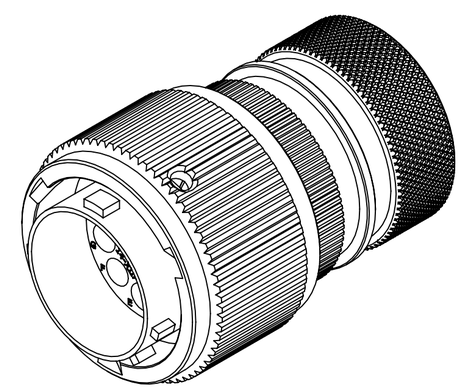

4. RECOMMEND CABLE RANGE IS 16~18 AWG(1.318~0.811mm2), CABLE JACKET DIAMETER RANGE IS 0.08~0.126 INCH(2~3.2mm) DIA

3. THIS P/N DOES NOT CONTAIN CONTACTS,THE CONTACTS NEED TO ORDER ANOTHER PURCHASE

2. ALL DIMENSIONS WITHOUT TOLERANCE ARE FOR REFERENCE ONLY

1. THE REFERENCED PRODUCT SHALL BE COMPLIANT TO ROHS DIRECTIVE.

NOTES

THIS DOCUMENT CONTAINS PROPRIETARY AND CONFIDENTIAL INFORMATION BELONGING TO AMPHENOL CORPORATION OR ITS SUBSIDIARIES. ANY DISCLOSURE OR USE IS PROHIBITED EXCEPT WITH AMPHENOL'S PRIOR WRITTEN CONSENT.
© 2025 AMPHENOL CORPORATION. ALL RIGHTS RESERVED.

Next Assembly

UNLESS OTHERWISE SPECIFIED

LINEAR DIMENSIONS ARE IN INCHES
TOLERANCES:
.XXXX = ± .0005
.XXX = ± .010
.XX = ± .03
.X = ± .1
ANGLES = ± 2˚
Amphenol STANDARDS PER 9-3800

THIRD ANGLE PROJECTION

APPROVALS		DATE
PREPARED BY:	HENRY HE	2025/6/9
LEAD/PRODUCT ENGINEER:	HENRY HE	
ENGINEERING MANAGER:	RAN XIAO	
PRODUCT GROUP:	C&I	
AIPG DIVISION:	AIO	
MATERIAL SPEC	PROCESS SPEC	

AMPHENOL CORPORATION
Amphenol Technology (Zhuhai) Co. Ltd.
No. 63 Xinghan Road, Sanzao Town, Jinwan, Zhuhai, PRC

ELECTRICAL, CONNECTOR PLUG
TYPE:LPT06SG-14-XIIP(025)(LC)
BLACK ZINC PLATING

SIZE	CAGE CODE	DOCUMENT NUMBER	REV
C	90MJ5	LPT06SG-14-XIIP(025)(LC)	**PA1**
SCALE: 2:1	REF:		SHEET 1 OF 1