SIGN	DATE	DESCRIPTION	APPROVER
1	01/25'05	Part No. changed.	Marvin
2	06/26'06	Current rating(cULus) is changed from 10A to 20A	Marvin
3	06/26'06	Solid/Stranded wire(AWG) is changed from 12-22 to 12-24	Marvin
4	8/10'06	Added VDE and TUV standard	鄭仁松
5	12/15'08	Flange screw changed from "-"solt type to "+/-"solt type	Kind
6	12/15'08	Operating Temp. changed from -30°C~+105°C to -40°C~+115°C	Kind
7	2010.03.08	Add the 2P mark	Jacke

THIS IS CAD DRAWING, DO NOT REVISE MANUALLY!!!

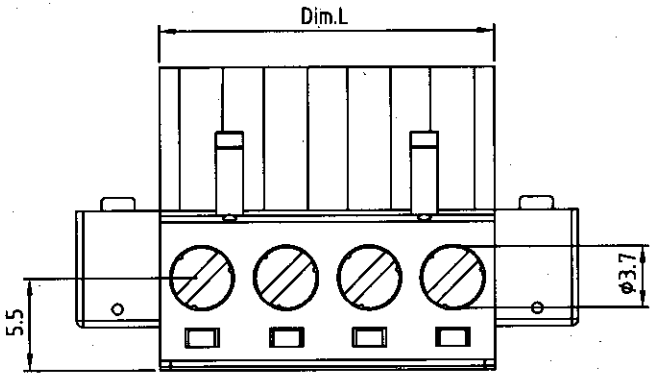

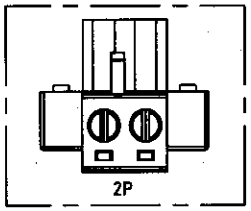

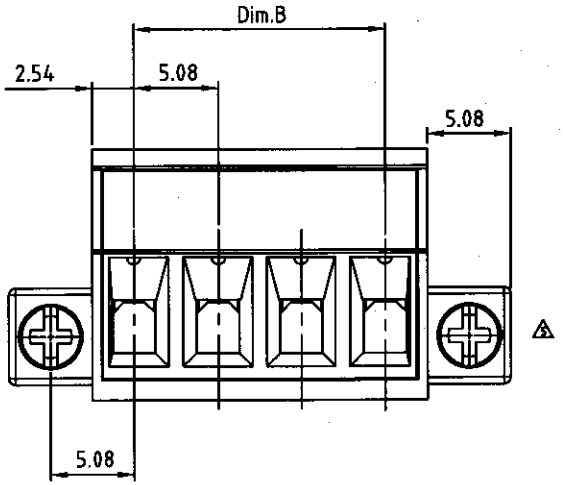

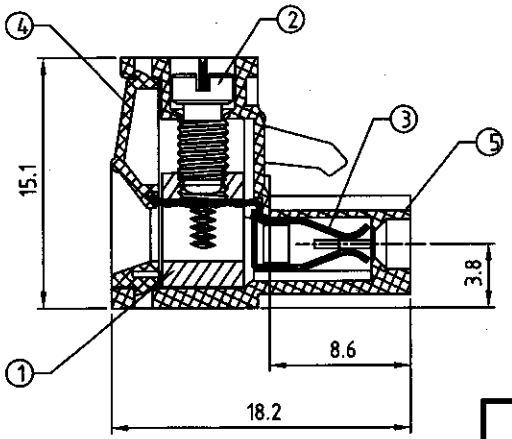

Material

- Item① Clamp: Brass(CuZn) Ni plated
- Item② Terminal screw: Steel Zinc plating "-" slot type
- Item③ Female contact: PhBz ,Tin plated
- Item④ Terminal Cover: Thermoplastic (UL94V-0)
- Item⑤ Terminal housing: Thermoplastic (UL94V-0)
- 5 Item⑥ With flange screw:Steel Zinc plating M2.5"+/-" slot type

4 Electrical cULus/VDE/TUV

- Voltage rating: 300VAC/300VAC/300VAC
- 6 Current rating: 20A/20A/20A
- Wire range: $2.5mm^2/0.34-2.5mm^2$
- 3 Solid wire(AWG): 12-24/14-22
- 3 Stranded wire(AWG): 12-24/14-22
- Torque: 5Lb-In/0.5Nm/0.56Nm
- Screw: M3
- Wire strip length: 7-8mm
- Withstanding Voltage: 1.6KV/2.5KV/2.5KV
- 6 Operating temperature: -40°C to +115°C
- Safety Approval: cULus VDE TÜV
- Use with OQ1.0x1.0mm square pin, Withdrawal force:200 - 500gf /pole

TJ xx 51x 2 xxxx G 7

xx		51x		xxxx		G 7
02	2 CONTACTS	0	Black	0000: "@" Logo		RoHS
03	3 CONTACTS	2	Red	000A: "ANYTEK" Mark		Pb<40,000ppm
...	...	3	Orange	Any special item by customer requst. please contact sales department.		
24	24 CONTACTS	5	Green			
		6	Blue			
		8	Grey			

安尼特克電子科技(深圳)有限公司 文管中心 2010 3. 1 ANYTEK INTERNATIONAL CO., LTD.

Dim.L = N x 5.08
Dim.B = (N-1)x 5.08
N= number of poles

Dim. \ poles	2P-6P	7P-12P	13P-18P	19P-24P
Dim.L	±0.10	±0.20	±0.30	±0.40
Dim.B	±0.10	±0.20	±0.25	±0.30

ANYTEK

CUSTOMER COPY

ALL RIGHTS RESERVED. REPRODUCTION OR ISSUE TO THIRD PARTIES IN ANY FORM WHATEVER IS NOT PERMITTED WITHOUT WRITTEN AUTHORITY FROM THE PROPRIETOR. PROPERTY OF ANYTEK TECHNOLOGY CO., LTD

TITLE	TJ-5.08mm Series With flange				
PART NO.	TJxx51x2xxxxG			DWG NO.	8TJ0009
APPROVED	CHECKED	DESIGNED	DRAWN	CUST NO.	
		Jacke 2010.03.09	Jacke 2010.03.09	UNIT: mm	Tolerance
				SCALE: NONE	X. ±0.50
				SHEET: 01/01	X.X ±0.30
				REV.: G	X.XX ±0.10
					X° ±1°