DOCUMENT NO.	SHEET 1 OF 1	REV.
10-731729-48P		PA4

CUSTOMER DRAWING

GENERAL TOLERANCE					
DIM. RANGE	0.5 ~ 3	> 3 ~ 6	> 6 ~ 30	> 30 ~ 120	> 120 ~ 400
TOLERANCE	±0.1	±0.1	±0.2	±0.3	±0.5

REVISIONS		
REV	DESCRIPTION	DATE
PA1	INITIAL RELEASE	2015-09-18
PA2	CHANGE THE CONTACT PART NUMBER	2017-03-22
PA3	ADD THE GASKET	2017-06-29
PA4	ADD THE RANGE OF THE WIRE	2017-08-01

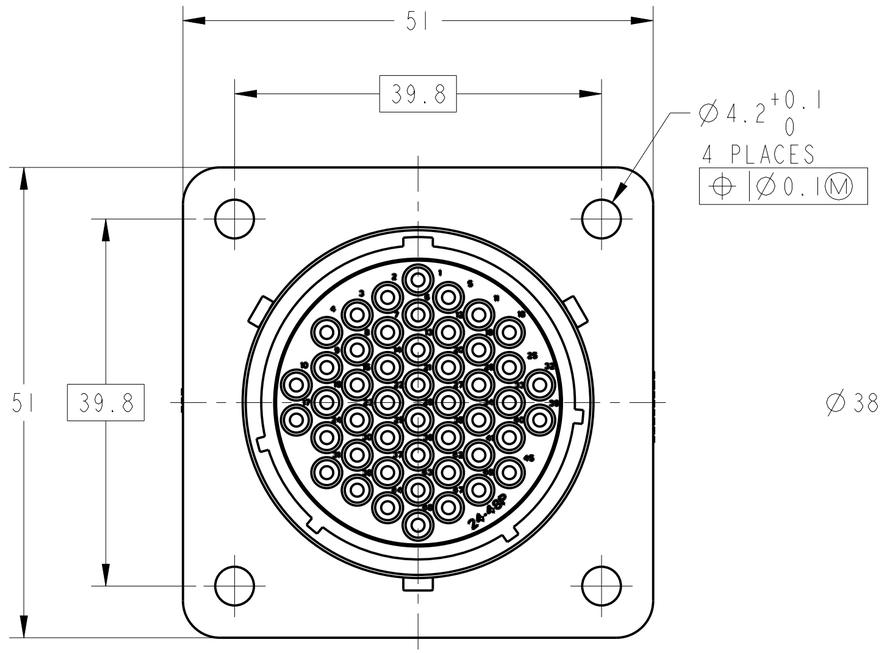

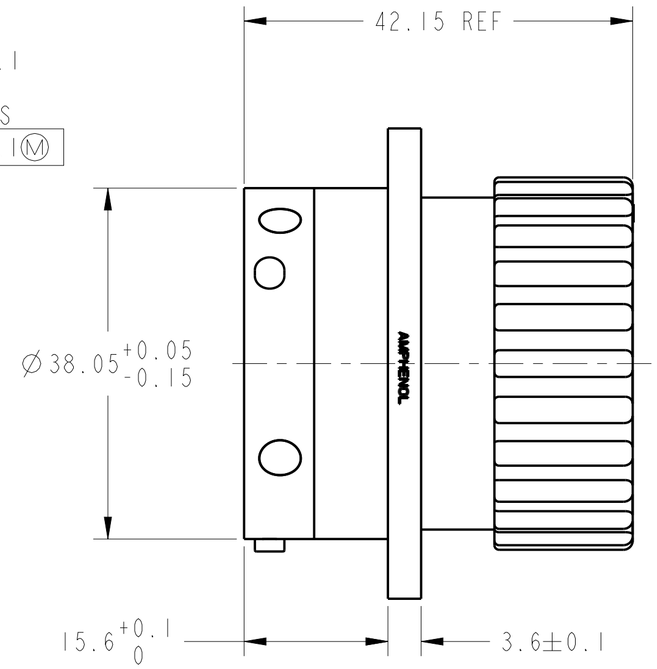

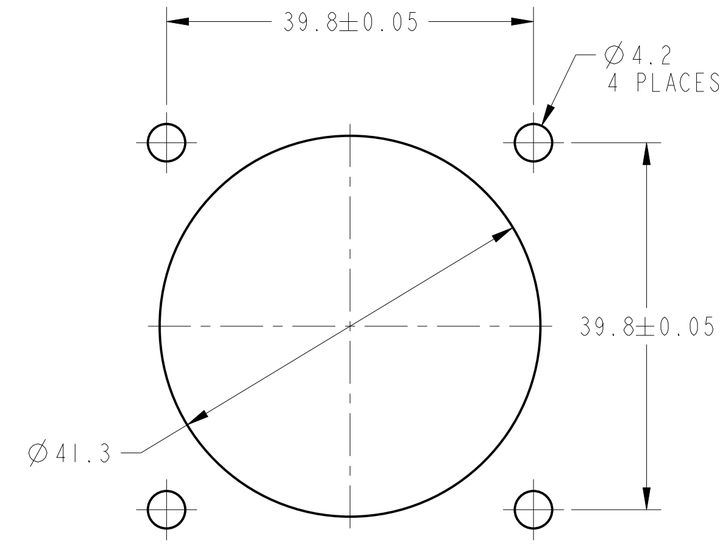

RECOMMEND CUT-OUT

SPECIFICATIONS 技术参数

RATED CURRENT SIZE 16 额定电流	13Amps
OPERATING VOLTAGE 工作电压	250VAC
WITHSTANDING VOLTAGE 耐电压	2000V DC
INSULATION RESISTANCE 绝缘电阻	5000 MEGOHMS MIN.
OPERATING TEMPERATURE 工作温度	-55°C-105°C
WATER PROOF 防水等级	IP67 (MATED)
FLAMMABILITY 防火等级	UL 94 V-0
DURABILITY 机械寿命	500 CYCLES

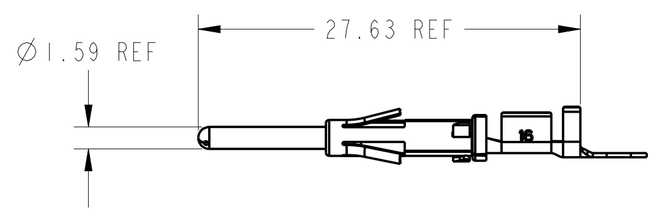

PIN CONTACT SIZE 16 (48 PCS)
(16号公端子每套48个)
RANGE OF THE INSULATION DIAMETER
IS 1.8~2.4mm
(绝缘皮直径范围是1.8~2.4mm)

1. CONTACT MUST BE PURCHASED SEPARATELY(端子必须单独购买).

SIZE 16 PIN CONTACT P/N (16号公端子料号)		FINISH (表面处理)
APPLICABLE 16-18 AWG 适用电缆	APPLICABLE 20-22 AWG 适用电缆	
C10-731537-161	C10-731538-201	TIN PLATING
C10-731537-162	C10-731538-202	NICKEL PLATING
C10-731537-163	C10-731538-203	GOLD FLASH
C10-731537-164	C10-731538-204	10 μ" GOLD PLATING
C10-731537-165	C10-731538-205	30 μ" GOLD PLATING

NOTES:

THE PART NUMBER OF THE GASKET IS C10-040450-028, WHICH MUST BE PURCHASED SEPARATELY.

THIS DOCUMENT CONTAINS PROPRIETARY INFORMATION AND SUCH INFORMATION MAY NOT BE DISCLOSED TO OTHERS FOR ANY PURPOSE OR USED FOR MANUFACTURING PURPOSES WITHOUT WRITTEN PERMISSION FROM THE AMPHENOL CORP.

N/A
NEXT ASSEMBLY
METRIC DOCUMENT

PRO/ENGINEER INFORMATION
Pro/e Model Used:
UPT00D-24-48P.ASSEM
Drawing Name:
10-731729-48P

UNLESS OTHERWISE SPECIFIED
LINEAR DIMENSIONS ARE IN:
MILLIMETERS
TOLERANCES:
ANGLES= ±2°
DEFAULT LINEAR TOLERANCES SEE TABLE
DIM.& TOL. PER ASME Y14.5M-1994;
DRM PER MIL-DTL-31000;
OTHER AMPHENOL STANDARDS: 9-9318
LEGENDS:
△=FLAG NOTE CALL OUT
REFERENCE ONLY

SPECIFICATIONS
MATERIAL SPEC.
N/A
PROCESS SPEC.
N/A

POS	QTY	PART NUMBER	DESCRIPTION	NOTE
PARTS LIST				

APPROVALS		DATE
PREPARED BY	Jerry Pu	May-02-17
ENGINEER IN CHARGE	Jerry Pu	
DESIGN MANAGER	Ran Xiao	
DESIGN ACTIVITY GROUP	C3	

THIRD ANGLE PROJECTION

AMPHENOL INDUSTRIAL OPERATIONS
Amphenol Technology(Zhuhai)Co.,Ltd
No.63, Xinghan Road, Sanzao Town, Jinwan, Zhuhai, PRC

U

CONNECTOR RECEPTACLE,
TYPE UPT00D-24-48P

SIZE	CAGE CODE	DOCUMENT NO.	REV.
C	77820	10-731729-48P	PA4

SCALE: 1.0 | REF. | SHEET 1 OF 1

FORMAT: C-L-E-Rev.B

DOCUMENT NO. 10-731729-48P | SHEET 1 OF 1 | REV. PA4