AirBorn

Cable to Board (Standard Footprint)

.050"

9 thru 100 Contacts

Rugged Cable

MM, MN

Rugged Board Mount

MK, ML

MM–312–051–161–45WP (METAL)

MN–311–051–161–45WP (PLASTIC)

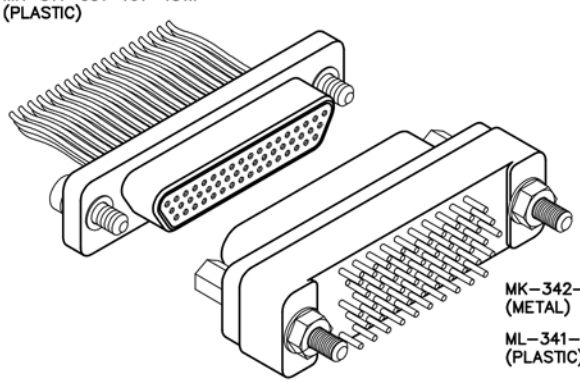

MK–342–051–225–2200 (METAL)

ML–341–051–225–2200 (PLASTIC)

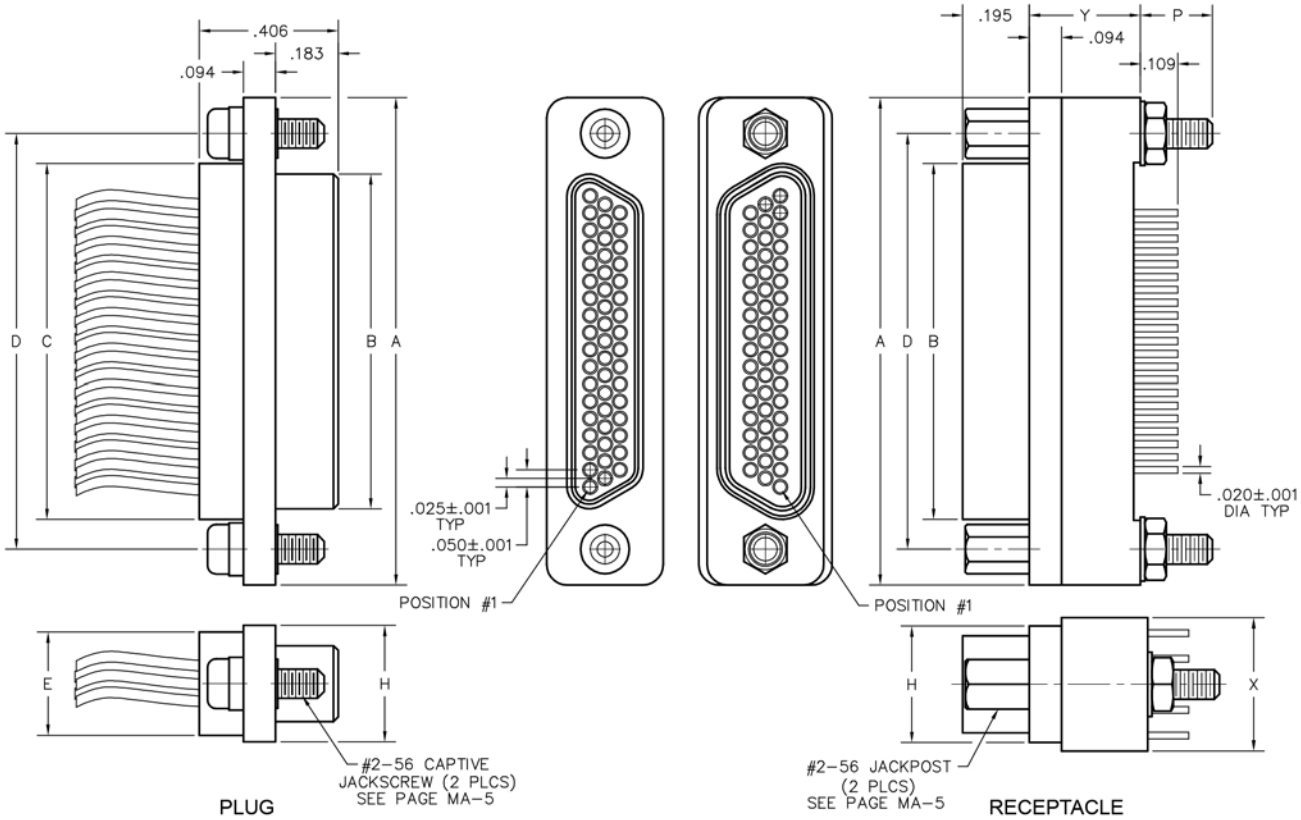

DIMENSIONS													
SIZE	CONTACT ROWS	A	B PLUG MAX	B RCPT MAX	C	D	E POTTING WELL MAX	H	P	X	Y	Z**	HARDWARE
9	2	.775	.334	.400	.390	.565	.270	.298	.210	.298	.280	.390	#2–56 UNC THD (#2–56 CLEARANCE OR #2–56 UNC THREADED INSERT)
15		.925	.484	.550	.540	.715						.540	
21		1.075	.634	.700	.690	.865						.690	
25		1.175	.734	.800	.790	.965						.780	
31		1.325	.884	.950	.940	1.115						.930	
37		1.475	1.034	1.100	1.090	1.265			.214		.330	1.080	
51	3	1.425	.984	1.050	1.040	1.215	.310	.341	.219	.390	.325	1.046	
69		1.725	1.284	1.350	1.340	1.515						1.346	
100	4	2.160	1.384	1.508	1.432	1.800	.360	.384	.216	.490	.379	1.530	#4–40 UNC THD (#4–40 CLEARANCE OR #4–40 UNC THREADED INSERT)
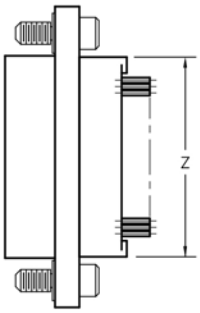
* = 69 POSITION CONNECTORS ARE AVAILABLE IN METAL ONLY.
** = "Z" DIMENSION FOR TURNING JACKSCREW ONLY