FAIR-RITE Flex Sheets and EMI Suppression Ferrite Cores

Fair-Rite Products Corp. Your Signal Solution

RoHS Compliant This page of product is RoHS compliant.

DIMENSIONS: in.

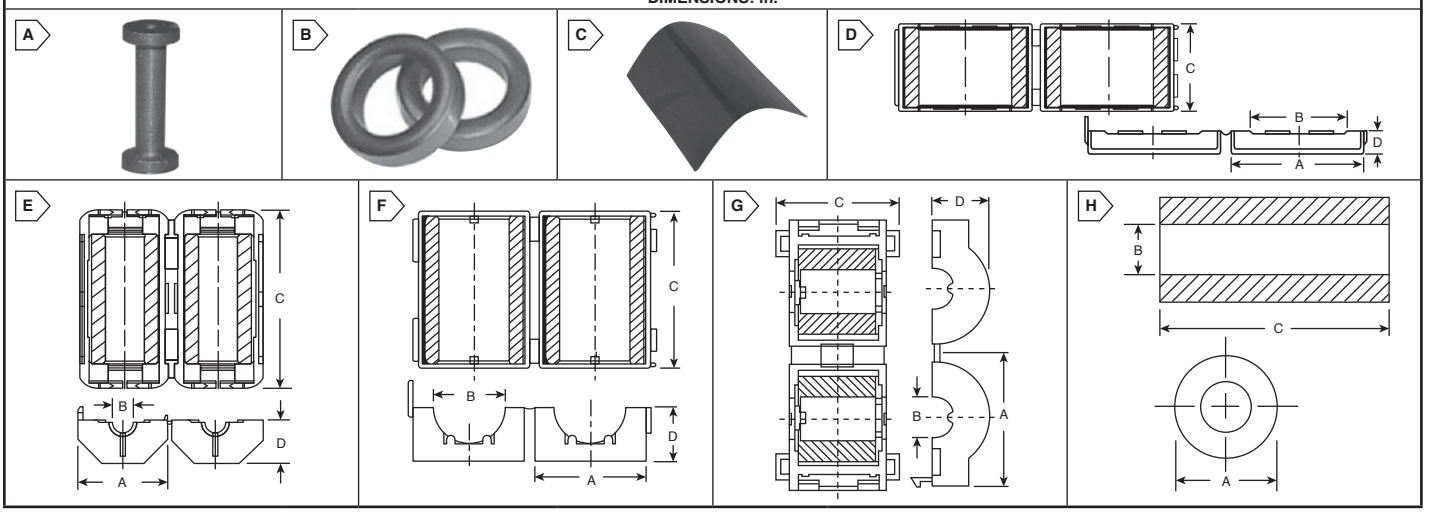

HIGH FREQUENCY GROUND BOBBINS

For quantities greater than listed, call for quote.

MOUSER STOCK NO. Mfr.	Mfr. Part No.	Fig.	Inductance (nH)	Dimensions: in. ø O.D.	ø I.D.	Length	Price Each 1	100	1000
623	9643001015	A	38	9.55	4.65	19	.79	.59	-
623	9643001165	A	17.5	5.05	2.65	12.7	.65	.49	.35
623	9677001015	A	39	9.5	4.65	19	1.56	1.25	.85
623	9677001165	A	18	5.05	2.65	12.7	.81	.65	.59
623	9677282009	A	100	28	17	20	2.15	1.72	1.17
623	9677282509	A	95	28	17	25	3.84	3.07	2.09
623	9677352509	A	124	35	21	25	5.60	4.49	3.05
623	9677353509	A	110	35	21	35	6.54	5.24	3.56
623	9677453509	A	142	45	27	35	9.97	7.99	5.43
623	9677142009	A	55	14	9	20	1.47	1.18	.802
623	9677182009	A	66	18	11	20	1.88	1.51	1.02
623	9677182208	A	65	18.95	11.8	23.2	2.30	1.84	1.25
623	9677182209	A	65	18	11	22	2.05	1.64	1.11

RING CORE TOROID FOR CLOSED MAGNETIC CIRCUITS

For quantities greater than listed, call for quote.

MOUSER STOCK NO. Mfr.	Mfr. Part No.	Fig.	Inductance (nH)	Dimensions: mm øO.D.	øI.D.	Core Material	Price Each 1	100	1000
623	5943000301	B	440	12.70	7.15	43	.29	.22	.19

FLEXIBLE FERRITE SHEETS

For quantities greater than listed, call for quote.

MOUSER STOCK NO. Mfr.	Mfr. Part No.	Fig.	Dimensions (mm)	Total Thickness (mm) with adhesive tape	Price Each 1	5	10
Material 20							
623	38M1010AA1212	C	120 x 120	0.13	23.09	15.39	10.77
623	38M1020AA1212	C	120 x 120	0.23	23.09	15.39	10.77
623	38M1050AA0606	C	60 x 60	0.53	18.63	12.42	8.69
Material 45							
623	38M2010AA1212	C	120 x 120	0.13	23.09	15.39	10.77
623	38M2020AA1212	C	120 x 120	0.23	23.09	15.39	10.77
623	38M2050AA0606	C	60 x 60	0.53	18.63	12.42	8.69
Material 60							
623	38M3010AA1212	C	120 x 120	0.13	23.09	15.39	10.77
623	38M3020AA1212	C	120 x 120	0.23	23.09	15.39	10.77
623	38M3050AA0606	C	60 x 60	0.53	18.63	12.42	8.69
Material 120							
623	38M4010AA1212	C	120 x 120	0.13	23.09	15.39	10.77
623	38M4020AA1212	C	120 x 120	0.23	23.09	15.39	10.77
623	38M4050AA0606	C	60 x 60	0.53	18.63	12.42	8.69
Material 140							
623	38M5010AA1212	C	120 x 120	0.13	23.09	15.39	10.77
623	38M5020AA1212	C	120 x 120	0.23	23.09	15.39	10.77
623	38M5050AA0606	C	60 x 60	0.53	18.63	12.42	8.69
Material 220							
623	38M6010AA1212	C	120 x 120	0.13	23.09	15.39	10.77
623	38M6020AA1212	C	120 x 120	0.23	23.09	15.39	10.77
623	38M6050AA0606	C	60 x 60	0.53	18.63	12.42	8.69

EMI SUPPRESSION CORES WITH CASES

- Case material: Polypropylene
- Flammability rating: UL94-V0

Flat Cable Cores with Cases

For quantities greater than listed, call for quote.

MOUSER STOCK NO. Mfr.	Mfr. Part No.	Fig.	Typ. Imp. (Ω) @ 100MHz	Dimensions: in. A	B	C	D	Price Each 1	10	50
623	0443166651	D	225	1.950	1.350	1.272	.320	2.78	2.49	2.46
623	0443163951	D	235	2.670	2.050	1.272	.320	4.36	4.03	3.97
623	0443164051	D	215	3.180	2.570	1.272	.320	8.01	6.17	5.61

Round Cable Cores with Cases

For quantities greater than listed, call for quote.

MOUSER STOCK NO. Mfr.	Mfr. Part No.	Fig.	Typ. Imp. (Ω) @ 100MHz	Dimensions: in. A	B	C	D	Price Each 1	10	50
Material 31										
623	0431164181	E	260	1.220	0.512	1.550	0.600	3.74	3.70	2.95
623	0431164281	E	310	0.788	0.260	1.550	0.385	2.18	1.85	1.51
623	0431164951	E	280	0.680	0.200	1.420	0.331	1.57	1.30	1.27
623	0431167281	E	240	0.933	0.400	1.550	0.460	2.64	2.33	1.80

EMI SUPPRESSION CORES WITH CASES (CONT.)

- Case material: Polypropylene
- Flammability rating: UL94-V0

Round Cable Cores with Cases (Cont.)

For quantities greater than listed, call for quote.

MOUSER STOCK NO. Mfr.	Mfr. Part No.	Fig.	Typ. Imp. (Ω) @ 100MHz	Dimensions: in. A	B	C	D	Price Each 1	10	50
Material 31 (Cont.)										
623	0431173951	E	180	0.504	0.200	0.984	0.220	1.27	1.19	.909
623	0431176451	E	380	1.520	0.722	1.870	0.754	7.58	6.83	6.69
623	0431177081	E	375	2.220	1.000	1.690	1.080	17.13	13.17	11.97
Material 43										
623	0443164151	F	250	1.142	0.528	1.280	0.583	3.34	3.09	2.75
623	0443164251	F	275	0.705	0.275	1.272	0.362	1.87	1.74	1.61
623	0443167251	F	225	0.870	0.402	1.272	0.433	2.08	1.67	1.61
623	0443625006	G	113	0.972	0.311	0.898	0.402	1.07	.98	.874
623	0443665806	G	88	1.035	0.362	0.843	0.433	1.53	1.29	1.25
623	0443800506	G	75	1.169	0.504	0.811	0.500	1.59	1.48	1.32
623	0443806406	G	90	1.350	0.591	0.835	0.591	1.11	1.01	.988
Material 44										
623	0444164181	E	230	1.220	0.512	1.550	0.600	2.17	2.06	1.96
623	0444164281	E	260	0.788	0.260	1.550	0.385	1.73	1.59	1.44
623	0444167281	E	210	0.933	0.400	1.550	0.461	2.03	1.90	1.70
623	0444173951	E	150	0.504	0.200	0.984	0.220	1.25	1.10	1.08
623	0444176451	E	365	1.520	0.722	1.870	0.754	6.72	6.05	5.23
623	0444177081	E	340	2.220	1.000	1.690	1.080	22.24	20.36	18.52
623	2644181281	F	104	2.402	1.465	0.500	1.165	6.36	4.89	4.44
Material 46										
623	0446173551	F	176	1.150	0.740	1.650	0.579	2.53	1.94	1.77
Material 61										
623	0461164181	E	206	1.220	0.512	1.550	0.600	3.45	3.36	3.25
623	0461164281	E	269	0.788	0.260	1.550	0.385	2.52	2.46	2.42
623	0461167281	E	195	0.933	0.400	1.550	0.461	1.66	1.60	1.50

EMI SUPPRESSION CORES

Recommended suppression materials of unwanted signals between 10MHz and 1000MHz

For quantities greater than listed, call for quote.

MOUSER STOCK NO. Mfr.	Mfr. Part No.	Fig.	Typ. Imp. (Ω) @ 100MHz	Dimensions: in. A	B	C	Price Each 1	100	500	1000
Material 31										
623	2631181381	H	490	2.445	1.465	2.500	21.90	16.83	12.79	11.77
623	2631102002	H	260	1.020	0.505	1.125	1.90	1.64	1.46	1.42
623	2631480002	H	295	0.485	0.200	1.000	.50	.421	.41	.39
623	2631480102	H	140	0.485	0.200	0.500	.50	.442	.411	.381
623	2631540002	H	300	0.562	0.250	1.125	1.05	.737	.671	.576
623	2631665702	H	225	0.687	0.375	1.125	.77	.667	.636	.585
Material 43										
623	2643102002	H	235	1.020	0.505	1.125	1.58	1.39	1.27	1.18
623	2643480002	H	236	0.485	0.200	1.000	.91	.576	.53	.488
623	2643540002	H	250	0.562	0.250	1.125	.63	.48	.454	.40
623	2643625002	H	113	0.625	0.312	0.562	.51	.339	.329	.318
623	2643625202	H	384	0.625	0.312	2.000	1.87	1.44	1.30	1.19
623	2643626402	H	196	0.735	0.400	1.125	1.14	.878	.843	.738
623	2643665702	H	200	0.687	0.375	1.125	1.03	.65	.58	.57
623	2643665802	H	88	0.687	0.375	0.500	.71	.342	.325	.308
623	2643800502	H	82	0.825	0.520	0.468	.49	.425	.394	.368
623	2643801002	H	47	1.142	0.748	0.295	.96	.655	.614	.507
623	2643802702	H	80	1.400	0.900	0.500	1.23	.92	.84	.801
623	2643803802	H	108	2.400	1.400	0.500	4.01	3.28	3.14	2.98
Material 61										
623	2661102002	H	225	1.020	0.505	1.125	3.25	2.78	2.56	2.30
623	2661540002	H	250	0.562	0.250	1.125	1.68	1.44	1.08	.84

LOW FREQUENCY EMI SUPPRESSION CORES

- Round Cable Core Assembly
- Frequency Range: 200 kHz - 30 MHz

Material 75

For quantities greater than listed, call for quote.

MOUSER STOCK NO. Mfr.	Mfr. Part No.	Fig.	Typ. Imp. (Ω) @ 100MHz	Dimensions: in. A	B	C	D	Price Each 1	10	50
623	0475164181	E	102	1.181	0.514	1.555	0.610	12.27	10.48	9.33
623	0475164281	E	102	0.787	0.260	1.555	0.394	7.87	6.06	5.51
623	0475167281	E	92	0.906	0.400	1.555	0.461	12.14	9.34	8.49
623	0475176451	E	130	1.516	0.736	1.870	0.754	19.91	16.59	14.93
623	0475178281	E	87	0.827	0.354	1.551	0.413	7.75	5.96	5.41
623	0475181651	E	66	0.512	0.201	0.906	0.238	5.25	4.48	4.00

© Copyright 2016 Mouser Electronics

© Copyright 2016 Mouser Electronics