# PRODUCT SPECIFICATION

| Part Number | SWT0220 | | | Rev | A | Date | 30/04/25 |
|---|---|---|---|---|---|---|---|
| Product Description | Tactile Switch, 5.2 X 5.2mm, Top Actuated, Gull Wing, SPST – NO | | | | | Page | 1 |
| Doc Number | SWT0220 | Prepared | CC | Checked | YR | Approved | PH |

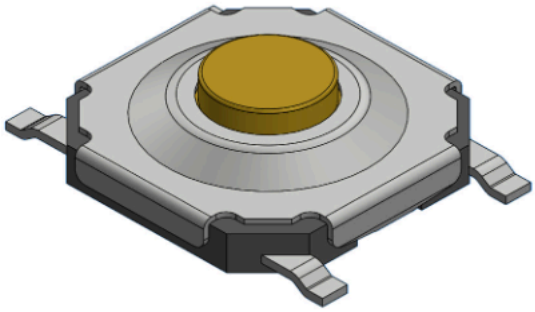

Features:

Outline: 5.2 X 5.2 mm

Profile height: 1.60mm

Actuated Orientation: Top Actuated

Lead Type: Gull Wing

## Specification:

### Material

Case: LCP, Black

Terminal: Phosphor Bronze

Contact: Stainless Steel

Film: PI, Yellow

Cover: Stainless Steel

Button: Brass

### Plating

Terminal: Silver Plated

Contact: Silver Plated

### Electrical

Voltage rating: 12V DC

Current Rating: 50mA Max.

Contact Resistance: 500mΩ Max.

Dielectric Withstanding Voltage: 250V AC

Insulation Resistance: 100MΩ Min

### Mechanical & Environmental

Operating Temperature: -40°C to +85°C

Operating Force: See Ordering Grid

Travel: 0.25±0.10mm

Durability: 100,000 cycles

Solder Tails Co-planarity: 0.10mm Max.

## Ordering Grid:

Ordering Grid

SWT0220 – 0160 XX G S A

Profile Height
0160 = 1.60mm

Operating Force
16 = 160±40gf
25 = 250±40gf

Lead Type
G = Gull Wing

Contact Plating
S = Silver

Packing Options
A = Tape & Reel
*(4000pcs per reel)*

**Reflow Soldering Profile:**

Pb-free reflow profile requirements

| Parameter | Reference | Specification |
|---|---|---|
| Average temperature gradient in preheating | | 2.5°C/s |
| Soak time | tsoak | 2-3 minutes |
| Time above 217°C | t1 | 60 s |
| Time above 230°C | t2 | 50 s |
| Time above 250°C | t3 | 3 s |
| Peak temperature in reflow | Tpeak | 255°C (–0/+5°C) |
| Temperature gradient in cooling | | Max -5°C/s |

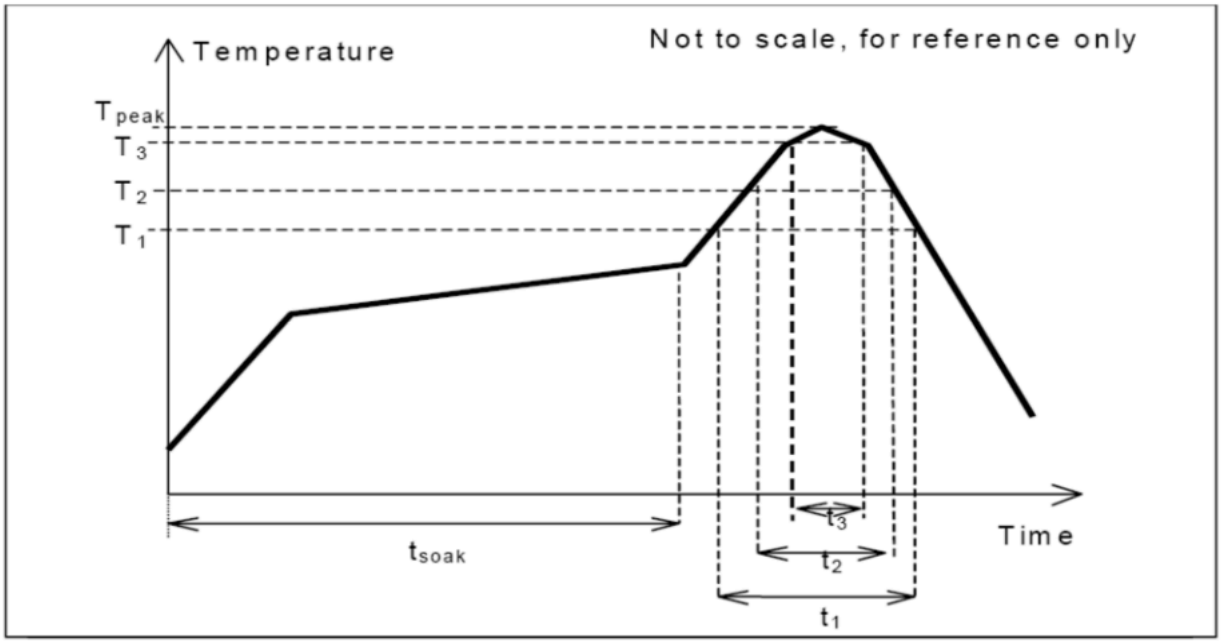


Fig. 1.0, this profile is the minimum requirement for evaluating soldering heat resistance of components. Heat transfer method used for reflow soldering is hot air convection. The actual air temperatures used to achieve the specified profile is higher and largely dependent on the reflow equipment.

# PRODUCT SPECIFICATION

| Part Number | SWT0220 | | | Rev | A | Date | 30/04/25 |
|---|---|---|---|---|---|---|---|
| Product Description | Tactile Switch, 5.2 X 5.2mm, Top Actuated, Gull Wing, SPST – NO | | | | | Page | 3 |
| Doc Number | SWT0220 | Prepared | CC | Checked | YR | Approved | PH |

**Precaution for Operating:**

1. Deviation of operating part from the centre axis of the switch shall be within 0.35mm.
2. Allowable operating angle: 90 ±3 degrees.
3. Do not overload and shock the switch.
4. Avoid pressing on the film with sharp objects.
5. Cleaning after product soldering is not allowed.
6. Avoid switching on for a long time.

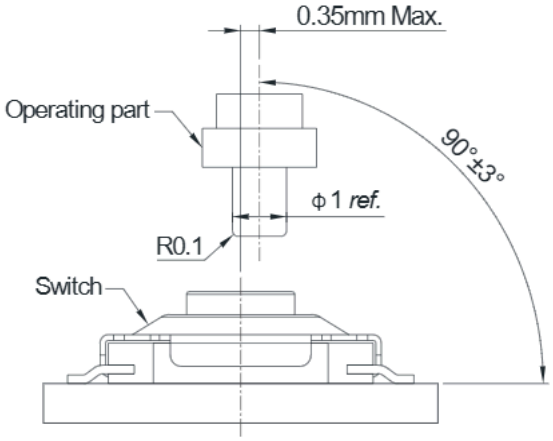


Recommended Operating Conditions

**Precaution for Handling and Storage:**

1. Products are vacuum sealed in plastic bag with desiccant.
2. Recommended storage conditions: -20 to +50°C, 20% to 85% humidity.
3. Avoid exposing to corrosive gas, direct sunlight.
4. After the packaging is opened, use the products as quickly as possible.
5. Products that have not been used up must be vacuum sealed in plastic bag with desiccant.

# PRODUCT SPECIFICATION



Revision details:

| Revision | Information | Page | Release Date |
|---|---|---|---|
| 0.1 | First draft | - | 28/04/2025 |
| A | First Release | | 30/04/2025 |
| | | | |
| | | | |