ON Semiconductor

FINAL PRODUCT/PROCESS CHANGE NOTIFICATION #20183

Generic Copy

Issue Date: 30-Aug-2013

TITLE: Wafer Fabrication Site Transfer (Transistor in STK4XX Product)

PROPOSED FIRST SHIP DATE: 30-Nov-2013

AFFECTED CHANGE CATEGORY(S): Wafer Fab Site Change

FOR ANY QUESTIONS CONCERNING THIS NOTIFICATION:
Contact your local ON Semiconductor Sales Office or <Ryoichi.Murofushi@onsemi.com >

SAMPLES: Contact your local ON Semiconductor Sales Office or <Ryoichi.Murofushi@onsemi.com >

ADDITIONAL RELIABILITY DATA: Available
Contact your local ON Semiconductor Sales Office or <Kenichi.Nigo@onsemi.com >

NOTIFICATION TYPE:

Final Product/Process Change Notification (FPCN)

Final change notification sent to customers. FPCNs are issued at least 90 days prior to implementation of the change.

ON Semiconductor will consider this change approved unless specific conditions of acceptance are provided in writing within 30 days of receipt of this notice. To do so, contact <quality@onsemi.com>.

DESCRIPTION AND PURPOSE:

The IGBT components labeled as **TRANSISTOR** in red below are being discontinued due to the Fab closure of Sanyo Gunma Fab. The replacement IGBT component now qualified will be sourced from ON Semiconductor ISMF Fab located in Seremban, Malaysia. ISMF is an internal ON Semiconductor Fab with a long history of production. It is ISO/TS16949 certified. < http://www.onsemi.com/PowerSolutions/content.do?id=1138>

The new component was redesigned for the process from the ISMF Fab.The product design and electrical specifications will remain identical. Reliability Qualification and full electrical characterization has been completed on the designated package qualification.

ON Semiconductor

FINAL PRODUCT/PROCESS CHANGE NOTIFICATION #20183

RELIABILITY DATA SUMMARY:

Reliability Test Results:

Test Items	Test Condition	Test Time	Failure
High Temperature Humidity-Bias	Ta=85 degC,RH=85%, Vcc=Recommended	1000hr	0/11
High Temperature Bias	Ta=125 degC Vcc=Recommended	1000hr	0/11
Temperature Cycle	Ta=-40 degC ⇔ Ta=125 degC 1cycle=1hr.	100Cycles	0/11

ELECTRICAL CHARACTERISTIC SUMMARY:

The difference changes the production wafer Fab site, and the specifications as the Hybrid Module do not change.

Change parts

About parts of red wire, wafer fab site changed.

Equivalent Block Diagram (example: STK433-130N-E)

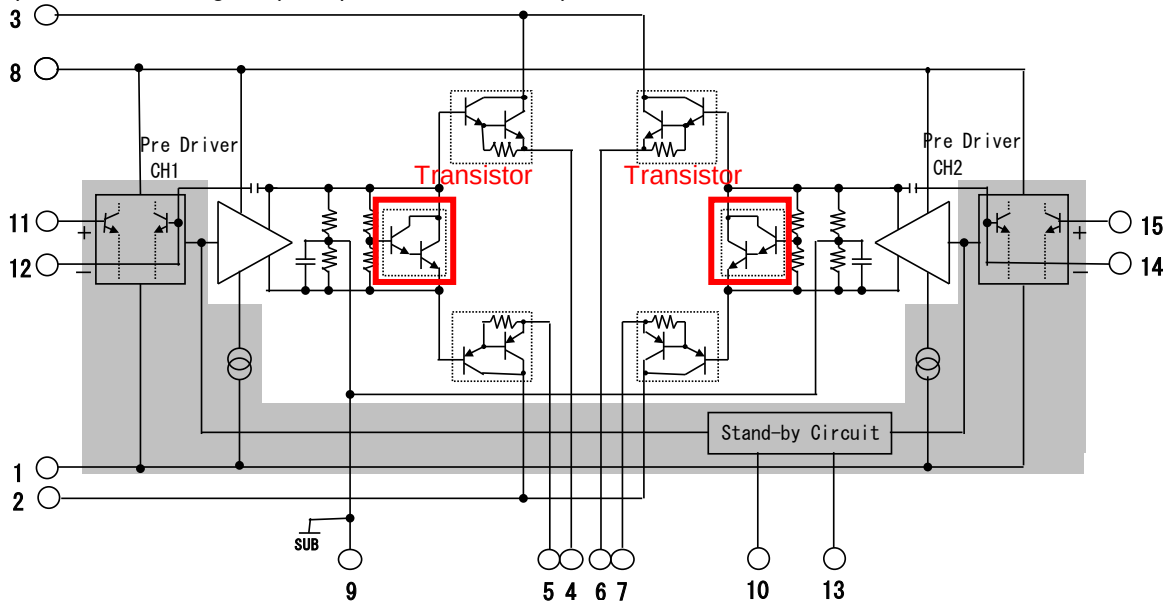

List of affected General Parts

STK433-040GN-E	STK433-100N-E	STK433-870GN-E
STK433-040N-E	STK433-130N-E	STK433-890N-E
STK433-060N-E	STK433-330N-E	STK442-730N-E
STK433-070GN-E	STK433-840N-E	STK443-530N-E