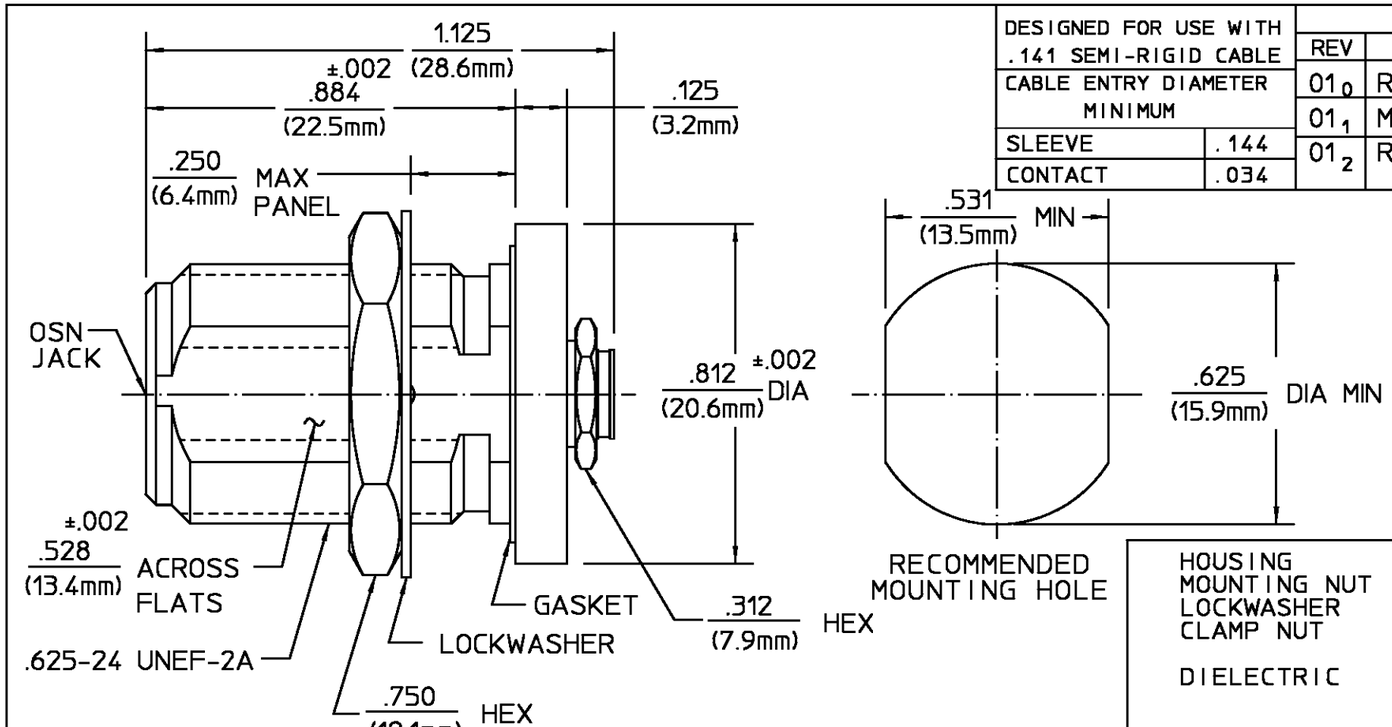

DESIGNED FOR USE WITH .141 SEMI-RIGID CABLE	
CABLE ENTRY DIAMETER MINIMUM	
SLEEVE	.144
CONTACT	.034

REVISIONS

REV	DESCRIPTION	DATE	APPROVED
01_0	RELEASED	8-6-82	R.SABA
01_1	MINOR CHANGE PER ECN 87-0898 (2 OF 2)	L.ROSS 7-15-87	MH/M 7-23-87
01_2	REDRAWN IN CAD PER ECN 92-0010	11-03-91	19730793

ELECTRICAL	MECHANICAL	ENVIRONMENTAL
Nominal Impedance (Ohms) 50	Interface Dimensions MIL-STD-348A, Fig. 304.2	Temperature Rating -65°C to +125°C
Frequency Range (GHz) DC to 18	Recommended Mating Torque 12-15 in-lbs	Vibration MIL-STD-202, Method 204, Condition B.
Volt Rating (VRMS MAX) @ Sea Level 1,000	Mating Charateristics: Insertion: 2.0	Shock MIL-STD-202, Method 213, Condition I.
VSWR 1.008 +.002 f(GHz)	Withdrawal: 2.0	Thermal Shock MIL-STD-202, Method 107, Condition B, Except High Temp shall be +85°C
Insertion Loss (dB MAX) 15dB @ 10GHz	Force to Engage and Disengage (In-Lbs MAX) 6 in-lbs	Moisture Resistance MIL-STD-202, Method 106
RF Leakage (dB MIN) -60 @ 2-3 GHz	Center Contact Captivation Axial (Lbs) 6.0	Corrosion - MIL-STD-202, Method 101, Condition B, 5% salt spray
Corona, 70,000 Ft (VRMS MIN) 500	Radial (In-Oz) 4.0	
Dielectric Withstanding Voltage (VRMS MIN) @ Sea Level 1,500	Cable Retention Axial Force (Lbs) 60.0	
Contact Resistance (Milliohms MAX) Center Contact 1.0	Torque (In-Oz) N/A	
Outer Contact N/A	Weight (Grams) TBD	
Cable to Housing N/A		
RF High Potential @ Sea Level (VRMS MIN @ 5 MHz) 1,500		
I.R.(Megohms MIN) 5,000		

COMPONENT	MATERIAL	FINISH
HOUSING MOUNTING NUT LOCKWASHER CLAMP NUT	STAINLESS STEEL PER ASTM-A484 AND ASTM-A582, TYPE 303	PASSIVATE PER ASTM-A380
DIELECTRIC	TFE FLUOROCARBON PER ASTM-D-1457	N/A
CENTER CONTACT	BERYLLIUM COPPER PER ASTM B 196, ALLOY C17300, CONDITION H	GOLD PLATE PER MIL-G-45204 OVER COPPER PLATE PER MIL-C-14550
SLEEVE	BRASS PER QQ-B-626 COMP. 360, HALF HARD	GOLD PLATE PER MIL-G-45204 OVER COPPER PLATE PER MIL-C-14550
GASKET	SILICONE RUBBER PER ZZ-R-765	N/A

UNLESS OTHERWISE SPECIFIED DIMENSIONS ARE IN INCHES
TOLERANCE ON
FRAC. ± 1/64 DEC. ±.005 ANGLES ± 1°

DRAWN BY J.MCINNIS DATE 8-3-82
CHECKED BY GERALD LORD 6AUG82
APP'D BY RMF 8/6/82

AMP Incorporated
140 Fourth Avenue
Waltham, MA 02451-7599

These drawings and specifications are the property of Omni Spectra Incorporated and shall not be reproduced or copied or used in whole or in part as the basis for the manufacture or sale of item(s) without written permission.

USE ASS'Y PROCEDURE

408-08243
NO. A.P. (36-001)

TITLE OSN HIGH FREQ. BULKHEAD FEEDTHROUGH CABLE JACK SOLDER CLAMP ATTACHMENT

SIZE	CODE IDENT NO.		REV
B	26805	3604-7841-02	01_2

SCALE 3 : 1 SHEET 1 OF 1

CUSTOMER DRAWING

AMP PART # 1058628-1
SHEET 1 OF 1 REV A

Mouser Electronics

Authorized Distributor

Click to View Pricing, Inventory, Delivery & Lifecycle Information:

TE Connectivity:

3604-7841-02