CHIP COILS (CHIP INDUCTORS) LQH44PN□□□□P0□ REFERNCE SPECIFICATION

1. Scope

This reference specification applies to chip coils (chip inductors) LQH44PN_P0 series for general electronic equipment.

2. Part Numbering

(Ex.)

LQ	H	44	P	N	4R7	M	P	0	L
Product ID	Structure	Dimension (L × W)	Application and characteristic	Category	Inductance	Tolerance	Dimension (T)	Other	Packaging L: ø180 taping

3. Part Number and Rating

Operating temperature range	(ambient temperature not including self-temperature rise)	-40°C to +85°C
	(product temperature including self-temperature rise)	-40°C to +125°C
Storage temperature range		-40°C to +125°C

Customer Part number	Murata Part number	Inductance		DC resistance (Ω)	Self-resonant frequency (MHz min.)	Rated current (mA)*3	
		Nominal value (μH)	Tolerance (%)			Based on inductance change*1	Based on temperature rise*2
	LQH44PN1R0NP0L	1.0	N: ±30	0.030±20%	90	2950	2450
	LQH44PN2R2MP0L	2.2	M: ±20	0.049±20%	70	2500	1800
	LQH44PN3R3MP0L	3.3	M: ±20	0.065±20%	50	2100	1770
	LQH44PN4R7MP0L	4.7	M: ±20	0.08±20%	40	1700	1700
	LQH44PN6R8MP0L	6.8	M: ±20	0.12±20%	35	1400	1340
	LQH44PN100MP0L	10	M: ±20	0.16±20%	25	1150	1170
	LQH44PN220MP0L	22	M: ±20	0.37±20%	17	800	790

*1 When rated current is applied to the products, inductance will be within ±30% of nominal inductance value.
*2 When rated current is applied to the products, temperature rise caused by self-generated heat shall be limited to 40°C max.
*3 Keep the temperature (ambient temperature plus self-generation of heat) under 125°C.

4. Testing Conditions

Unless otherwise specified	Temperature: ordinary temperature (15°C to 35°C) Humidity: ordinary humidity [25% to 85% (RH)]
In case of doubt	Temperature: 20°C±2°C Humidity: 60% to 70% (RH) Atmospheric pressure: 86 kPa to 106 kPa

5. Appearance and Dimensions

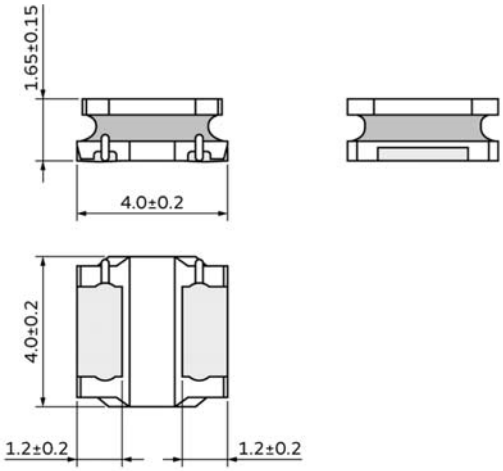

(in mm)

Unit mass (typical value): 0.10 g

6. Marking

No marking.

7. Electrical Performance

No.	Item	Specification	Test method
7.1	Inductance	Meet chapter 3 ratings.	Measuring equipment: Keysight 4284A or the equivalent Measuring frequency: 1 MHz
7.2	DC resistance	Meet chapter 3 ratings.	Measuring equipment: digital multimeter
7.3	Self-resonant frequency	Meet chapter 3 ratings.	Measuring equipment: Keysight E4991A or the equivalent

8. Mechanical Performance

No.	Item	Specification	Test method
8.1	Shear test	No significant mechanical damage or no sign of electrode peeling off shall be observed.	Test substrate: glass-epoxy substrate Force application direction: 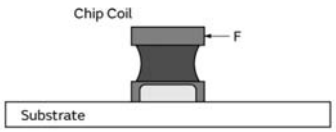 Applying force: 10 N Holding time: 5 s±1 s
8.2	Bending test	No significant mechanical damage or no sign of electrode peeling off shall be observed.	Test substrate: glass-epoxy substrate (100 mm × 40 mm × 1.0 mm) Pressurizing speed: 0.5 mm/s Deflection: 2 mm Holding time: 5 s 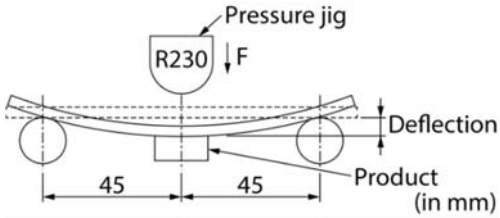

No.	Item	Specification	Test method
8.3	Vibration	Appearance shall have no significant mechanical damage.	Oscillation frequency: 10 Hz to 2000 Hz to 10 Hz, for approx. 20 min Total amplitude: 1.5 mm Test time: 3 directions perpendicular to each other, 2 h for each direction (6 h in total)
8.4	Solderability	90% or more of the outer electrode shall be covered with new solder seamlessly.	Flux: immersed in ethanol solution with a rosin content of 25(wt)% for 5 s to 10 s Solder: Sn-3.0Ag-0.5Cu solder Pre-heating: 150°C±10°C/60 s to 90 s Solder temperature: 240°C±5°C Immersion time: 3 s±1 s
8.5	Resistance to soldering heat	Appearance: No significant mechanical damage shall be observed. Inductance change rate: within ±10%	Flux: immersed in ethanol solution with a rosin content of 25(wt)% for 5 s to 10 s Solder: Sn-3.0Ag-0.5Cu solder Pre-heating: 150°C±10°C/60 s to 90 s Solder temperature: 270°C±5°C Immersion time: 10 s±1 s Post-treatment: left at a room condition for 24 h±2 h

9. Environmental Performance

The product is soldered on a substrate for test.

No.	Item	Specification	Test method
9.1	Heat resistance	Appearance: No significant mechanical damage shall be observed. Inductance change rate: within ±10% DC resistance change rate: within ±10%	Temperature: 85°C±2°C Test time: 1000 h (+48 h, -0 h) Post-treatment: left at a room condition for 24 h±2 h
9.2	Cold resistance	Appearance: No significant mechanical damage shall be observed. Inductance change rate: within ±10% DC resistance change rate: within ±10%	Temperature: -40°C±2°C Test time: 1000 h (+48 h, -0 h) Post-treatment: left at a room condition for 24 h±2 h
9.3	Humidity	Appearance: No significant mechanical damage shall be observed. Inductance change rate: within ±10% DC resistance change rate: within ±10%	Temperature: 70°C±2°C Humidity: 90% (RH) to 95% (RH) Test time: 1000 h (+48 h, -0 h) Post-treatment: left at a room condition for 24 h±2 h
9.4	Temperature cycle	Appearance: No significant mechanical damage shall be observed. Inductance change rate: within ±10% DC resistance change rate: within ±10%	Single cycle conditions: Step 1: -40°C±2°C/30 min±3 min Step 2: ordinary temperature/10 min to 15 min Step 3: +85°C±2°C/30 min±3 min Step 4: ordinary temperature/10 min to 15 min Number of testing: 10 cycles Post-treatment: left at a room condition for 24 h±2 h

10. Specification of Packaging

10.1 Appearance and dimensions of tape (12 mm width/plastic tape)

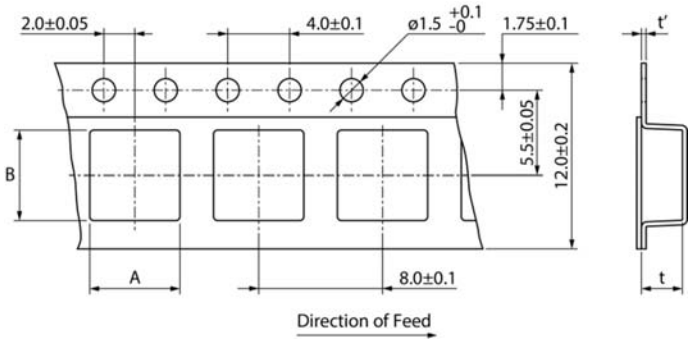

A	4.3±0.1
B	4.3±0.1
t	1.9±0.1
t'	(0.3)

(in mm)

* The dimensions of the cavity are measured at its bottom.

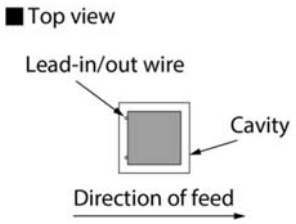

10.2 Taping specifications

Packing quantity (Standard quantity)	1000 pcs/reel
Packing method	The products are placed in embossed cavities of a plastic tape and sealed by a cover tape.
Feed hole position	The feed holes on the plastic tape are on the right side when the cover tape is pulled toward the user.
Joint	The plastic tape and the cover tape are seamless.
Number of missing products	Number of missing products within 0.1% of the number per reel or 1 pc., whichever is greater, and are not continuous. The specified quantity per reel is kept.

10.3 Break down force of tape

Break down force of plastic tape	10 N min.
Break down force of cover tape	5 N min.

10.4 Peeling off force of cover tape

Speed of peeling off	300 mm/min
Peeling off force	0.2 N to 0.7 N (The lower limit is for typical value.)

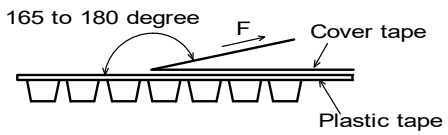

10.5 Dimensions of leader section, trailer section and reel

A vacant section is provided in the leader (start) section and trailer (end) section of the tape for the product. The leader section is further provided with an area consisting only of the cover tape. (See the diagram below.)

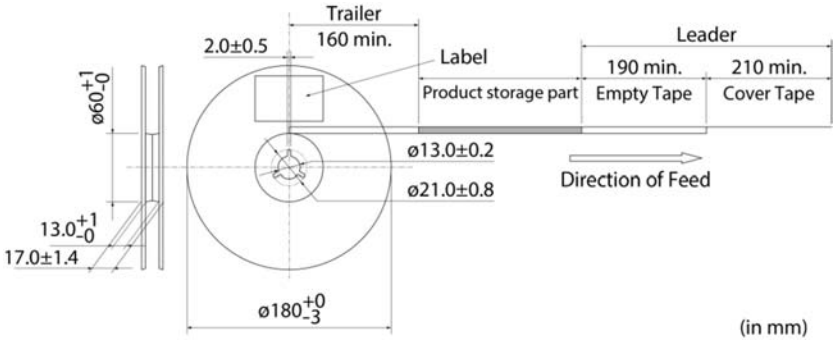

10.6 Marking for reel

Customer part number, Murata part number, inspection number (*1), RoHS marking (*2), quantity, etc.

*1 Expression of inspection No.: □□ (1) ○○○○ (2) ◇◇◇ (3)	(1) Factory code (2) Date First digit: year/last digit of year Second digit: month/Jan. to Sep.→1 to 9, Oct. to Dec.→O, N, D Third, Fourth digit: day (3) Serial No.
*2 Expression of RoHS marking: ROHS- Y (1) (△) (2)	(1) RoHS regulation conformity (2) Murata classification number

10.7 Marking on outer box (corrugated box)

Customer name, purchasing order number, customer part number, Murata part number, RoHS marking (*2), quantity, etc.

10.8 Specification of outer box

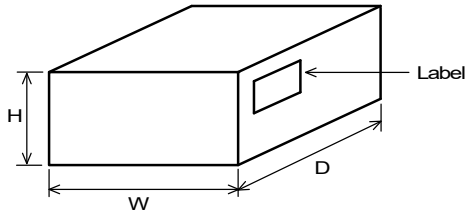

Dimensions of outer box (mm)			Standard reel quantity in outer box (reel)
W	D	H	
186	186	93	4
* Above outer box size is typical. It depends on a quantity of an order.			

11. ⚠Caution

Restricted applications	Please contact us before using our products for the applications listed below which require especially high reliability for the prevention of defects which might directly cause damage to the third party's life, body or property. (1) Aircraft equipment (2) Aerospace equipment (3) Undersea equipment (4) Power plant control equipment (5) Medical equipment (6) Transportation equipment (vehicles, trains, ships, etc.) (7) Traffic signal equipment (8) Disaster/crime prevention equipment (9) Data-processing equipment (10) Applications of similar complexity and/or reliability requirements to the applications listed in the above

12. Precautions for Use

This product is for use only with reflow soldering. It is designed to be mounted by soldering. If you want to use other mounting method, for example, using a conductive adhesive, please consult us beforehand.

12.1 Land dimensions

The following diagram shows the recommended land dimensions for reflow soldering.
The land dimensions are designed in consideration of electrical characteristics and mountability. Use of other land dimensions may preclude achievement of performance. In some cases, it may result in poor solderability, including positional shift. If you use other land pattern, consider it adequately.

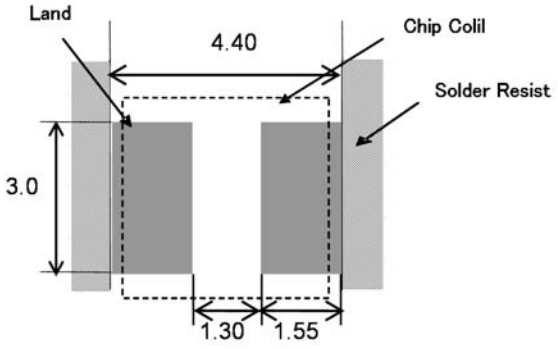

(in mm)

12.2 Flux and solder used

Flux	• Use a rosin-based flux. • Do not use a highly acidic flux with a halide content exceeding 0.2(wt)% (chlorine conversion value). • Do not use a water-soluble flux.
Solder	• Use Sn-3.0Ag-0.5Cu solder. • Standard thickness of solder paste: 100 μm to 150 μm

If you want to use a flux other than the above, please consult our technical department.

12.3 Soldering conditions (reflow)

- Pre-heating should be in such a way that the temperature difference between solder and product surface is limited to 100°C max.
  Cooling into solvent after soldering also should be in such a way that the temperature difference is limited to 100°C max.
  Insufficient pre-heating may cause cracks on the product, resulting in the deterioration of product quality.
- Standard soldering profile and the limit soldering profile is as follows.
  The excessive limit soldering conditions may cause leaching of the electrode and/or resulting in the deterioration of product quality.

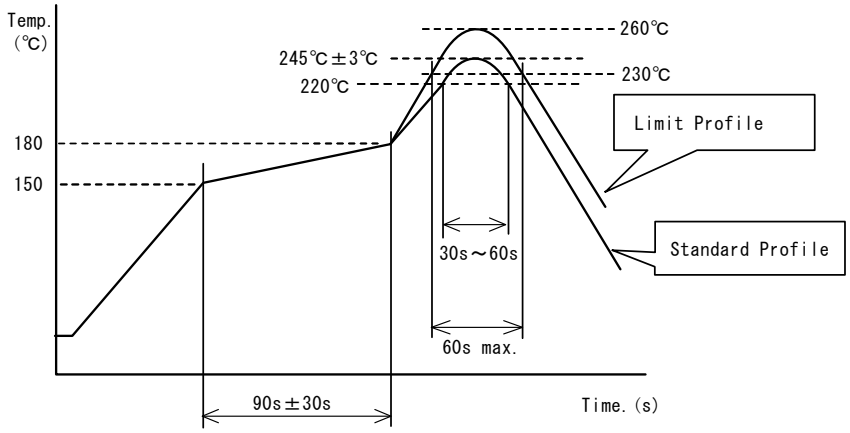

	Standard profile	Limit profile
Pre-heating	150°C to 180°C/90 s±30 s	150°C to 180°C/90 s±30 s
Heating	Above 220°C/30 s to 60 s	Above 230°C/60 s max.
Peak temperature	245°C±3°C	260°C/10 s
Number of reflow cycles	2 times	2 times

12.4 Reworking with soldering iron

The following requirements must be met to rework a soldered product using a soldering iron.

Item	Requirement
Pre-heating	150°C/approx. 1 min
Tip temperature of soldering iron	350°C max.
Power consumption of soldering iron	80 W max.
Tip diameter of soldering iron	ø3 mm max.
Soldering time	3 s (+1 s, -0 s)
Number of reworking operations	2 times max.
* Avoid a direct contact of the tip of the soldering iron with the product. Such a direction contact may cause cracks in the ceramic body due to thermal shock.	

12.5 Solder volume

Solder shall be used not to increase the volume too much.

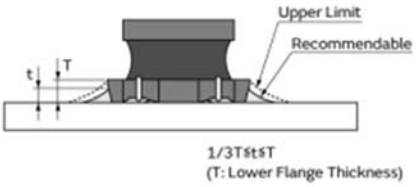

An increased solder volume increases mechanical stress on the product. Exceeding solder volume may cause the failure of mechanical or electrical performance.

12.6 Product's location

The following shall be considered when designing and laying out PCBs.

(1) PCB shall be designed so that products are not subject to mechanical stress due to warping the board.
[Products direction]
Products shall be located in the sideways direction to the mechanical stress.

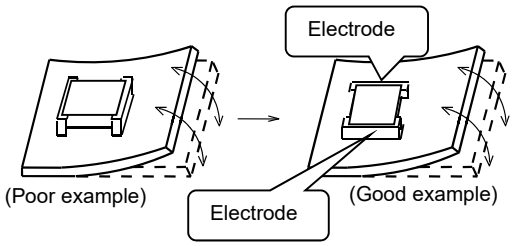

(2) Components location on PCB separation
It is effective to implement the following measures, to reduce stress in separating the board.
It is best to implement all of the following three measures; however, implement as many measures as possible to reduce stress.

Contents of measures	Stress level
(1) Turn the mounting direction of the component parallel to the board separation surface.	A > D*1
(2) Add slits in the board separation part.	A > B
(3) Keep the mounting position of the component away from the board separation surface.	A > C
*1 A > D is valid when stress is added vertically to the perforation as with hand separation. If a cutting disc is used, stress will be diagonal to the PCB, therefore A > D is invalid.	

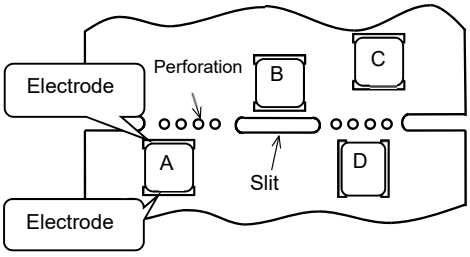

(3) Mounting components near screw holes
When a component is mounted near a screw hole, it may be affected by the board deflection that occurs during the tightening of the screw.
Mount the component in a position as far away from the screw holes as possible.

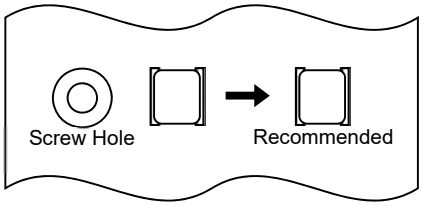

12.7 Handling of substrate

After mounting products on a substrate, do not apply any stress to the product caused by bending or twisting to the substrate when cropping the substrate, inserting and removing a connector from the substrate or tightening screw to the substrate. Excessive mechanical stress may cause cracking in the product.

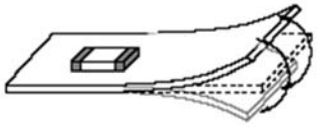

Bending

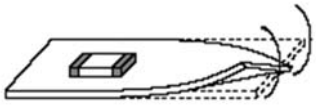

Twisting

12.8 Cleaning

The product shall be cleaned under the following conditions.

(1) The cleaning temperature shall be 60°C max. If isopropyl alcohol (IPA) is used, the cleaning temperature shall be 40°C max.

(2) Perform ultrasonic cleaning under the following conditions. Exercise caution to prevent resonance phenomenon in mounted products and the PCB.

Item	Requirement
Power	20 W/L max.
Time	5 min max.
Frequency	28 kHz to 40 kHz

(3) Cleaner
Alcohol-based cleaner: IPA
Aqueous agent: PINE ALPHA ST-100S

(4) There shall be no residual flux or residual cleaner. When using aqueous agent, rinse the product with deionized water adequately and completely dry it so that no cleaner is left.

* For other cleaning, consult our technical department.

12.9 Storage and transportation

Storage period	Use the product within 12 months after delivery. If you do not use the product for more than 12 months, check solderability before using it.
Storage conditions	• The products shall be stored in a room not subject to rapid changes in temperature and humidity. The recommended temperature range is -10°C to +40°C. The recommended relative humidity range is 15% to 85%. Keeping the product in corrosive gases, such as sulfur, chlorine gas or acid, oxidizes the electrode, resulting in poor solderability or corrosion of the coil wire of the product. • Do not keep products in bulk packaging. Doing so may cause collision between the products or between the products and other products, resulting in core chipping or wire breakage. • Do not place the products directly on the floor; they should be placed on a palette so that they are not affected by humidity or dust. • Avoid keeping the products in a place exposed to direct sunlight, heat or vibration.
Transportation	Excessive vibration and impact reduces the reliability of the products. Exercise caution when handling the products.

12.10 Resin coating

The inductance value may change due to high cure-stress of resin to be used for coating/molding products.
A wire breakage issue may occur by mechanical stress caused by the resin, amount/cured shape of resin, or operating condition etc. Some resin contains some impurities or chloride possible to generate chlorine by hydrolysis under some operating condition may cause corrosion of wire of coil, leading to wire breakage.
So, please pay your careful attention when you select resin in case of coating/molding the products with the resin.
Prior to use the coating resin, please make sure no reliability issue is observed by evaluating products mounted on your board.

12.11 Handling of product

- Sharp material such as a pair of tweezers or other material such as bristles of cleaning brush, shall not be touched to the winding portion to prevent the breaking of wire.
- Mechanical shock should not be applied to the products mounted on the board to prevent the breaking of the core.

13. ⚠Note

(1) Please make sure that your product has been evaluated in view of your specifications with our product being mounted to your product.
(2) You are requested not to use our product deviating from the reference specifications.
(3) The contents of this reference specification are subject to change without advance notice. Please approve our product specifications or transact the approval sheet for product specifications before ordering.

Mouser Electronics

Authorized Distributor

Click to View Pricing, Inventory, Delivery & Lifecycle Information:

Murata:
LQH44PN100MP0L LQH44PN1R0NP0L LQH44PN220MP0L LQH44PN2R2MP0L LQH44PN3R3MP0L LQH44PN4R7MP0L LQH44PN6R8MP0L