DATE	DESCRIPTION	REV.
9.20.04	CHANGE AS PER ECN 04–114	F
11.02.11	CHANGE AS PER ECN 11–142	G

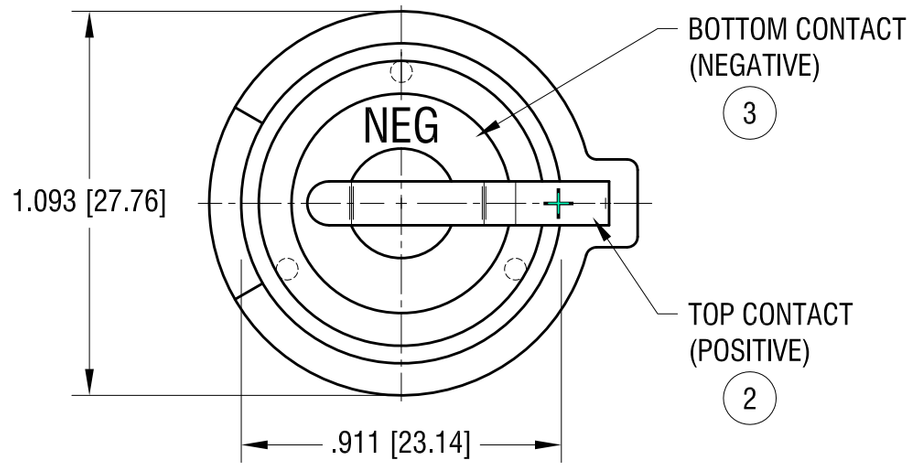

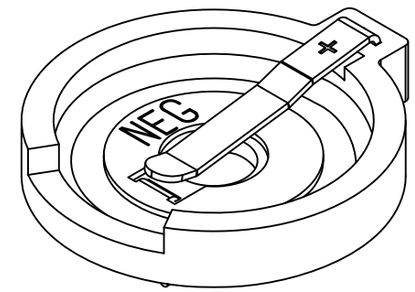

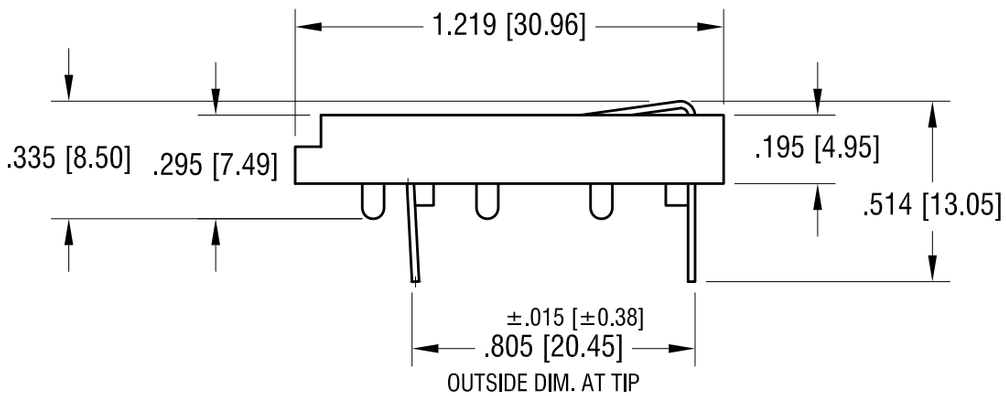

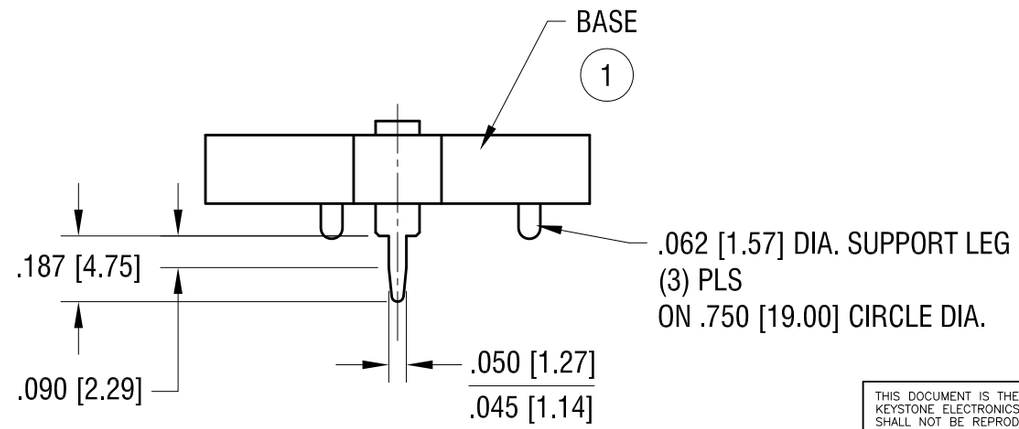

THIS DOCUMENT IS THE PROPERTY OF KEYSTONE ELECTRONICS CORP. AND SHALL NOT BE REPRODUCED, DISTRIBUTED OR USED AS A BASIS FOR MANUFACTURE WITHOUT PRIOR WRITTEN PERMISSION FROM KEYSTONE ELECTRONICS CORP.

MOUNTING HOLES

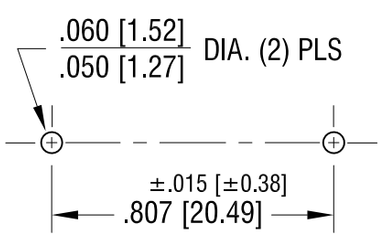

ITEM	DESCRIPTION	MATERIAL/FINISH
1	BASE BLACK	PBT (UL 94V-0)
2	TOP CONTACT	SPRING STEEL .020 [0.50] TH'K TIN NICKEL PLATE
3	BOTTOM CONTACT	

KEYSTONE ELECTRONICS CORP.
www.keyelco.com • ASTORIA, N.Y. 11105-2017 • Tel (718) 956-8900

PART NAME: COIN CELL PC BATTERY HOLDER

MATERIAL: AS NOTED

FINISH: AS NOTED

DRN BY: BOONE | DATE: 8.15.84

APP'D: LN | SCALE: 2X

TOLERANCES INCH [MM]
DECIMAL ± .010 [± 0.25]
ANGULAR ± 1°
UNLESS OTHERWISE SPECIFIED

CODE: C

DWG NO. 107