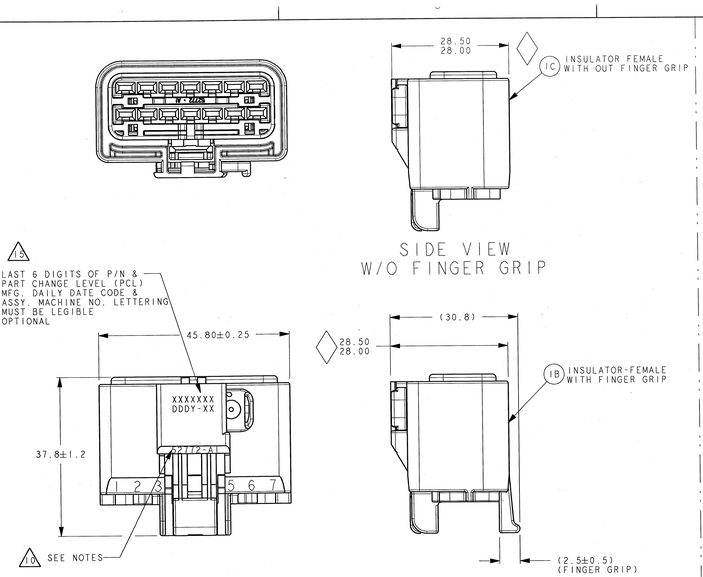

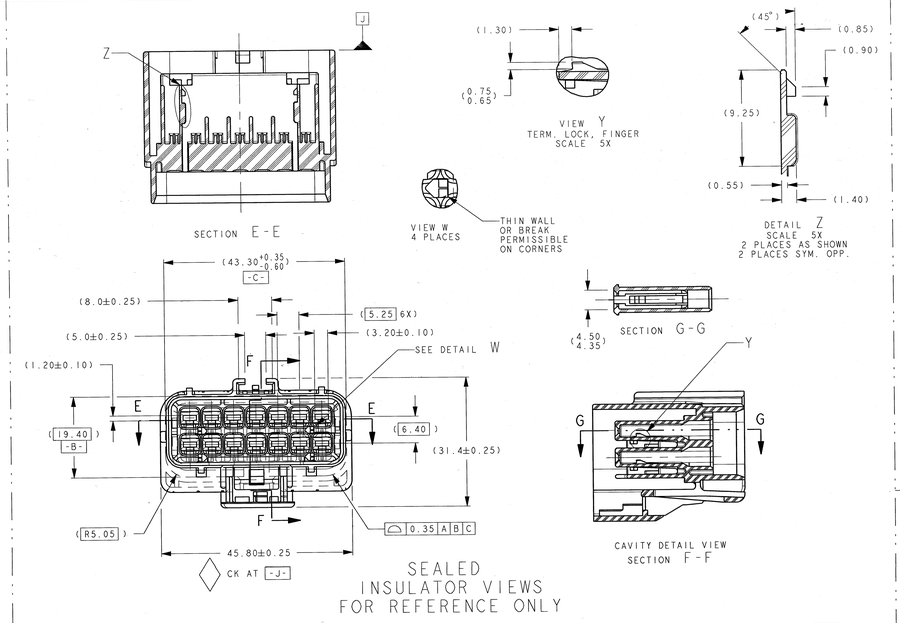

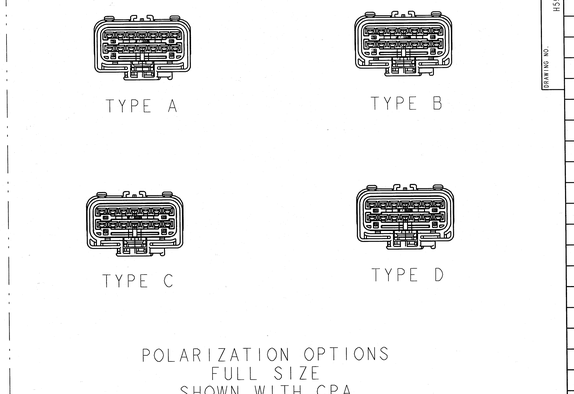

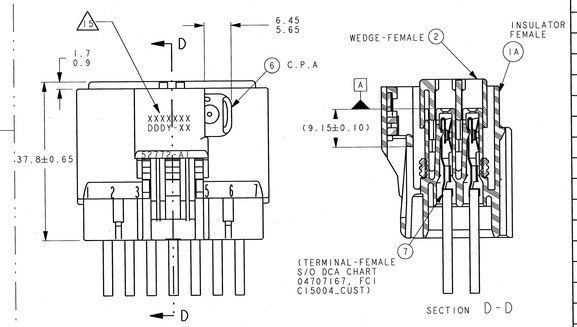

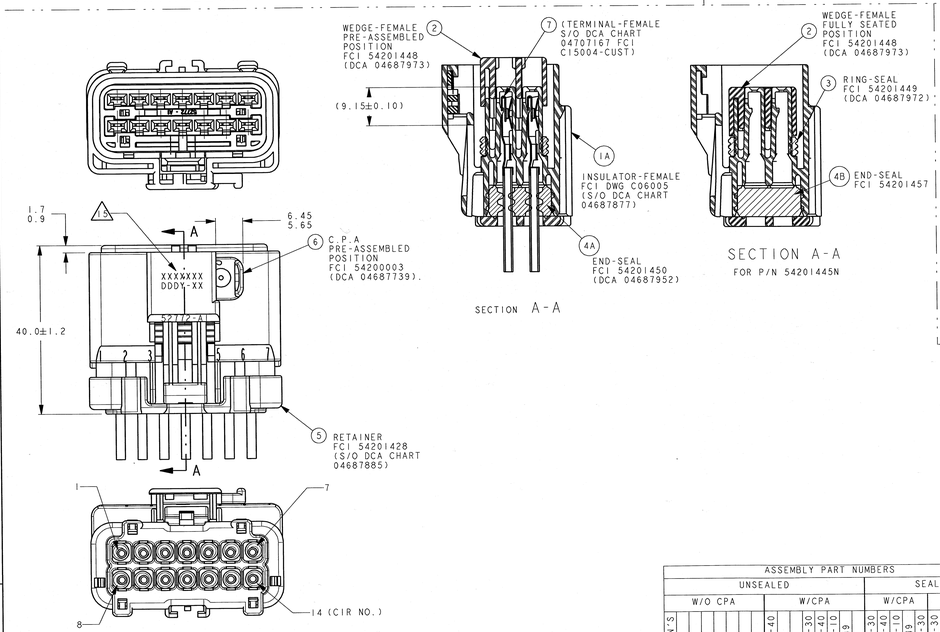

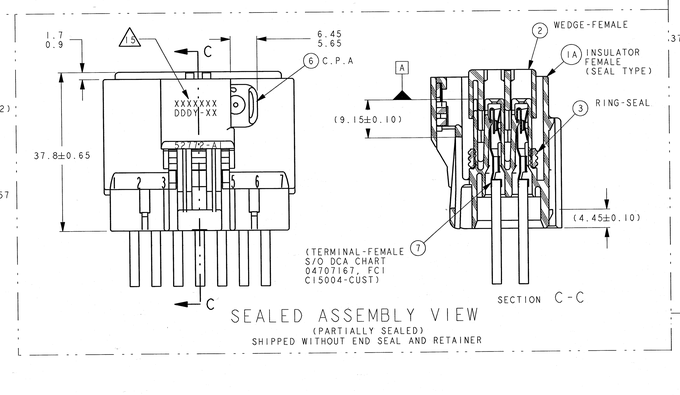

MATING PART NUMBER CHART

INDEX TYPE	COLOR	SEALED / UNSEALED	FCI (FEMALE ASSEMBLY PART NUMBERS)	(DCA) (FEMALE ASSEMBLY PART NUMBERS)	OTHER CUSTOMERS (FEMALE ASSEMBLY PART NUMBERS)	FCI (MATING ASSEMBLY PART NUMBER FOR REFERENCE ONLY)	(DCA) (MATING ASSEMBLY PART NUMBER FOR REFERENCE ONLY)	OTHER CUSTOMERS (MATING ASSEMBLY PART NUMBER FOR REFERENCE ONLY)
D	LT GREEN	UNSEALED	54201452N	N/A	T.B.D	DIRECT CONNECT APPLICATION		
		UNSEALED	54201452	04868345AA	T.B.D	DIRECT CONNECT APPLICATION		
	NATURAL	UNSEALED	54201467	N/A	N/A	54201468	N/A	T.B.D
		UNSEALED	54201403N	N/A	T.B.D	DIRECT CONNECT APPLICATION		
		UNSEALED	54201403	04687932	YNA 7283-4649	DIRECT CONNECT APPLICATION		
		SEALED	54201414N	N/A	T.B.D	54201418	N/A	T.B.D
		SEALED	54201414	04687928	YNA 7283-4749	54201418	04707243	T.B.D
C	DK GREY	UNSEALED	54201402N	N/A	T.B.D	DIRECT CONNECT APPLICATION		
		UNSEALED	54201402	04687931	YNA 7283-4648-10	DIRECT CONNECT APPLICATION		
		SEALED	54201413N	N/A	T.B.D	54201417	N/A	T.B.D
		SEALED	54201413	04687927	YNA 7283-4748-10	54201417	04707241	T.B.D
B	LT GREY	UNSEALED	54201453N	N/A	T.B.D	T.B.D	N/A	T.B.D
		UNSEALED	54201453	N/A	YNA 7283-4747-40	T.B.D	T.B.D	T.B.D
		UNSEALED	54201401N	N/A	T.B.D	54201405	N/A	T.B.D
		UNSEALED	54201401	04687930	YNA 7283-4647-40	54201405	04687936	T.B.D
		SEALED	54201412N	N/A	T.B.D	54201416	N/A	T.B.D
		SEALED	54201412	04687926	YNA 7283-4645-40	54201416	04687934	T.B.D
A	BLACK	UNSEALED	54201442N	N/A	T.B.D	54201404	N/A	T.B.D
		UNSEALED	54201442	04868197AA	T.B.D	54201404	04687935	T.B.D
		UNSEALED	54201400N	N/A	T.B.D	54201404	N/A	T.B.D
		UNSEALED	54201400	04687929	YNA 7283-4644-30	54201404	04687935	T.B.D
		SEALED	54201411	04687925	YNA 7283-4641-30	54201415	04867933	T.B.D
		SEALED	54201419N	*04707442	YNA 7283-4746-30	54201415	04867933	T.B.D
		SEALED	54201443	*04759591AA	YNA 7283-4341-30	54201415	04867933	T.B.D
		SEALED	54201445N	04707405	T.B.D	54201415	04867933	T.B.D
		SEALED	54201456N	N/A	GM 15125222	T.B.D	T.B.D	GM 15125233

FCI- FRAMATOME CONNECTORS INTERLOCK
DCA- DAIMLERCHRYSLER AUBURN HILLS
YNA- YAZAKI NORTH AMERICA

FCI	52772 OR 52772H	SEE CHART
VENDOR	VENDOR CODE	P/N

ASSEMBLY PART NUMBERS

	UNSEALED W/O CPA	UNSEALED W/O CPA	UNSEALED W/CPA	UNSEALED W/CPA	SEALED W/CPA	SEALED W/CPA	SEALED W/CPA	SEALED W/O CPA
OTHER CUST P/N'S			YNA 7283-4747-40	YNA 7283-4644-30	YNA 7283-4641-30	YNA 7283-4746-30	YNA 7283-4341-30	GM 15125232
(DCA P/N'S)			N/A	04868345AA	04687925	*04707442	*04759591AA	04707405
			04868197AA	04687929	04687926	04687928	04687927	N/A
			04687930	04687930	04687934	04687933	04687933	N/A
			04687931	04687931	04687935	04687933	04687933	N/A
			04687932	04687932	N/A	N/A	N/A	N/A
FCI P/N'S	54201453N	54201452N	54201442N	54201400N	54201411	54201419N	54201443	54201445N
	54201453	54201452	54201442	54201400	54201412	54201419	54201443	54201445
	54201401N	54201442N	54201442	54201401	54201416	54201415	54201415	54201415
	54201401	54201442	54201400	54201401	54201416	54201415	54201415	54201415
	54201412N	54201400N	54201400	54201402	54201417	54201415	54201415	54201415
	54201412	54201400	54201404	54201402	54201417	54201415	54201415	54201415
	54201402N	54201404	54201404	54201403	54201414	54201415	54201415	54201415
	54201402	54201404	54201404	54201403	54201414	54201415	54201415	54201415
	54201453N	54201404	54201404	54201404	54201413	54201415	54201415	54201415
	54201453	54201404	54201404	54201404	54201413	54201415	54201415	54201415
	54201467	54201404	54201404	54201404	54201413	54201415	54201415	54201415
REQUIRED								
3	3	3	3	3	3	3	3	3
P	P	P	P	P	P	P	P	P

ITEM	FCI P/N	(DCA P/N)	PART NAME
1A	54201432	04687804	SEALED, INDEX A; BLACK
1B	54201433	04687954	SEALED, INDEX B; LT GRK
1C	54201434	04687955	SEALED, INDEX C; DK GRY
1D	54201435	04687956	SEALED, INDEX D; NATURAL
1E	54201420	04707291	UNSEALED, INDEX A; BLK W/FINGER GRIP
1F	54201421	04707292	UNSEALED, INDEX B; LT GRY W/FINGER GRIP
1G	54201422	04707293	UNSEALED, INDEX C; DK GRY W/FINGER GRIP
1H	54201423	04707294	UNSEALED, INDEX D; NATURAL W/FINGER GRIP
1C	54201451	N/A	UNSEALED, INDEX D; LT GRN W/O FINGER GRIP
1C	54201466	N/A	UNSEALED, INDEX D; NATURAL W/O FINGER GRIP
2	54201448	04687973	WEDGE-FEMALE;ROYAL BLUE (PA66GF35)
3	54201449	04687972	RING SEAL;RED (SILICONE)
4A	54201450	04687952	END SEAL;LT BLUE (SILICONE)
4B	54201457	**93008014	END SEAL;BRT YELLOW (SILICONE)
5	54201428	04687948	RETAINER;BLACK (PA66GF35)
6	54200003	04687739	CPA LATCH;RED (PA66GF35)
INSULATOR MATERIAL A3EG			
CONNECTOR ASSEMBLY TEMPERATURE CLASS PER SAE/USCAR-2 REV4			
PART CHANGE LEVEL (PCL)			

* END SEAL & RETAINER HINGE TYPE INSTALLED AT WIRE HARNESS ASSEMBLY SEE HARNESS ASSEMBLY FOR HINGE RETAINER PART NUMBER

** INTERLOCK P/N

NOTES:

1. QUALITY ASSURANCE REQUIREMENTS PER DCA PS-7300:1 SPC DATA REQUIRED
2. ENGINEERING APPROVAL OF SUPPLIER SAMPLES IS REQUIRED PRIOR TO AUTHORIZATION OF PART PRODUCTION
3. CHANGES IN DESIGN COMPOSITION OR PROCESSING FROM THE PART PREVIOUSLY APPROVED FOR PART PRODUCTION REQUIRES PRIOR ENGINEERING APPROVAL
4. WIRING FABRICATORS MUST PURCHASE FROM SOURCES SHOWN
5. ALL THE SEALED CONNECTOR APPLICATIONS MUST BE USED WITH DCA WIRE SPEC. MS-8288 OR MS-9502 THIN WALL X-LINK 20,18, 16, 14 & 12 GAGE WIRES ONLY UNLESS OTHERWISE SPECIFIED (WIRE INSULATIONS Ø1.70 MIN TO Ø3.35 MAX.)
6. ALL NON-SEALED APPLICATIONS MAY BE USED WITH ANY WIRE INSULATION 22 GAGE THRU 10 GAGE (EXCEPT AS NOTED) PROVIDING THAT A TERMINAL GRIP FOR THAT CORE / INSULATION COMBINATION IS SHOWN ON THE FEMALE TERMINAL DRAWING.

   MAX. INSULATION CRIMP WIDTH = 4.50
   MAX. INSULATION CRIMP HEIGHT = 4.50
   MAX. INSULATION DIA. =4.09 (10 GA THIN WALL)

7. USE WITH CAVITY PLUG FCI P/N 54200005.(DCA P/N 56038308) ON SKIRTED PARTS ONLY WHEN REQUIRED
   USE WITH DOUBLE X-MAS TREE CLIP P/N 04707091 WHEN REQUIRED
   USE WITH SINGLE X-MAS TREE CLIP P/N 04625797 WHEN REQUIRED
8. DIRECT CONNECT DRAWING NO. 04707029
9. TEST METHOD PER DCA PERFORMANCE SPEC# PF-9600. CONNECTOR ENGAGE & DISENGAGE WITH LATCH DEPRESSED FORCE NOT TO EXCEED 142 N. FOR THIS SYSTEM.

   PRESSURE 3 PSI (22 KPA) PER PF-752(T)

   CPA SEATING FORCES - 40 N. MAX

   WEDGE SEATING FORCES - 142 N. MAX

   X-MAS TREE CLIP INSERTION FORCES - 75 N. MAX

10. SUPPLIER, MOLD & CAVITY I.D SIGNIFIES TOOL OWNERSHIP, FOR REFERENCE
11. ANNUAL QUALITY REQUIREMENTS:
    IT IS PERMISSIBLE TO PERFORM CONTINUOUS CONFORMANCE PER FCI SPECIFICATION #AQA-001 INSTEAD OF ANNUAL LAYOUT & ANNUAL PV REQUIREMENTS OF QS-9000 SECTION 2 & PF-9600

    ALL NON-REFERENCE DIMENSIONS ARE REQUIRED

    - USE INDEX A, BLACK SEALED AND UNSEALED FOR ALL AFFECTED INSULATOR CAVITIES
    - CURRENT PRODUCTION TOOLING
    - POINT OF LAST RUN

    SERVICE TOOLING GUIDE INFORMATION PER APEX TRAINING MANUAL

12. MUST CONFORM TO THE FOLLOWING DCA/YNA STANDARDS

    PF-9600 PERFORMANCE (DCA) EXCEPT AS NOTED ABOVE
    PS-7300 QUALITY ASSURANCE (DCA)
    PS-4480-CEK-4 (DCA) PART I.D. (G-009-2 YNA)
    PS-9065 REGRIND (DCA). (G-009-3 YNA)
    PS-9227 DATA EXCHANGE (DCA). (G-009-7 YNA)
    PS-10052 INFORMATION SECURITY (DCA)

13. THIS DRAWING (H59008) REPLACES DCA DRAWING NUMBER 04687876 LEVEL "N"
    DCA DRAWING IS FOR REFERENCE ONLY
14. FCI P/N'S WITH SUFFIX "N" DESIGNATES ASSEMBLIES W/O CPA
15. SEE ZONE H6 FOR PART IDENTIFICATION CALL OUT

UNCONTROLLED

FCI AUTOMOTIVE
DEC 20 2006
AMERICAS

FCI MASTER COPY WHEN IN RED

PART NUMBER F.C.I.	PART NUMBER	REV DATE	REV	DRAWING NUMBER
-	-	-	-	-
	CUSTOMER			

REVISION	DRAWING NO. H59008				REVISION S1		
-	8216	S1	P/N 54201458 DELETED. IT IS A DUPLICATE OF 54201456N	12-20-05	DK	SAS	SAS
ALL	7879	S	REVISED & REDRAWN IN PRO-E WAS IN CATIA SEE REV R3 FOR PREVIOUS	09-06-05	DK	SAS	SAS
I	I	I	LEVEL CHANGES P/N54201466 INS AND 54201467 ASSEMBLY ADDED FOR POL"D".	I	I	I	I
I	I	I	LATCH OPTION-2 ANGULAR DESIGN ADDED LATCH OPTION-1 SHOWN IN DETAIL VIEW	I	I	I	I
ZONE	ECN	LET	REVISION RECORD	DATE	DWN	CHK	REL

LAST INSP CODE -
LAST TOOL CODE -
LAST SEC G
LAST DATUM J

FCI
FRAMATOME CONNECTORS INTERNATIONAL
Automotive Group

THIS DRAWING, DESIGN AND ALL OTHER INFORMATION CONTAINED THEREON IS PROPRIETARY AND THE PROPERTY OF FRAMATOME CONNECTORS INTERLOCK, INC., AND MAY NOT BE COPIED, REPRODUCED OR DISCLOSED TO ANY THIRD PARTY WITHOUT THE EXPRESSED WRITTEN PERMISSION OF FRAMATOME CONNECTORS INTERLOCK, INC.

THIRD ANGLE PROJECTION

Framatome Connectors Interlock, Inc.
1770 Marie Street Westland, Michigan 48185-3233

DIMENSIONS IN mm	UNLESS OTHERWISE SPECIFIED	DRAWN: RAJKUMAR	DATE: 12/06/05
	1 PLACE DIM ± 0.25	CHECK: SUCHA SIAN	DATE: 12/06/05
	2 PLACE DIM ± 0.10	ENGR: SUCHA SIAN	DATE: 12/06/05
	ANGULAR DIM ± 2°	APPR: SUCHA SIAN	DATE: 12/06/05
	DO NOT SCALE DRAWING	SCALE: 2X & NOTED	

MATERIAL: SEE CHART

REFERENCE: - 04687876

THIS IS A COMPUTER AIDED DESIGN DRAWING SYSTEM: PRO/E
CAD ID. NO.: H59008 FILE NAME: H59008

NAME: CHART - ASSEMBLY
14-WAY FEMALE (SEALED & UNSEALED)
(2.80MM APEX CONN. SYS.)

DRAWING NO. H59008 REV. S1
SHEET 1 OF 1

TOOL NO.: A-040 FILE LOCATION: F102