DATE	REVISIONS	REV

DRAWING NUMBER
SLX-LX3054HD

REV

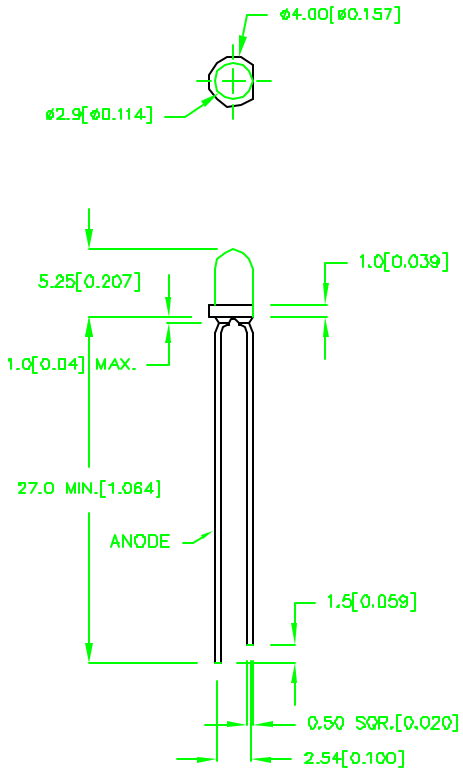

NOTE
1. LED LEADS SILVER.

ELECTRO-OPTICAL CHARACTERISTICS T_A =25°C I_f =20mA

PARAMETER	MIN	TYP	MAX	UNITS	TEST COND
PEAK WAVELENGTH		695 (RED)		nm	
FORWARD VOLTAGE		2.0	2.8	V_f	
REVERSE VOLTAGE	5.0			V_r	I_r=100uA
AXIAL INTENSITY		6.0		mcd	I_f=20mA
VIEWING ANGLE		60		2x theta	
EMITTED COLOR	RED				
EPOXY LENS FINISH	RED DIFFUSED				

LIMITS OF SAFE OPERATION AT 25°C

PARAMETER	MAX	UNITS
PEAK FORWARD CURRENT*	150	mA
STEADY CURRENT	25	mA
POWER DISSIPATION	120	mW
DERATE FROM 25°C	-1.6	mW/°C
OPERATING, STORAGE TEMP	-40 TO +85	°C
LEAD SOLDERING TEMP	+260	°C
2.0mm FROM BODY		3 SEC. MAX

* t<10uS

RELIABILITY NOTE
OUR MANY YEARS OF EXPERIENCE DATA ACCUMULATION INDICATE THAT SOLDER HEAT IS A MAJOR CAUSE OF EARLY AND FUTURE FAILURE. PLEASE PAY ATTENTION TO YOUR SOLDERING PROCESS.

LUMEX OPTO COMPONENTS INC.
290 E. HELLEN ROAD
PALATINE, ILLINOIS 60067
(847) 359-2790

CONFIDENTIAL INFORMATION
THE INFORMATION CONTAINED IN THIS DOCUMENT IS THE PROPERTY OF LUMEX OPTO/COMPONENTS, INC. EXCEPT AS SPECIFICALLY AUTHORIZED IN WRITING BY LUMEX OPTO/COMPONENTS, INC., THE HOLDER OF THIS DOCUMENT SHALL KEEP ALL INFORMATION CONTAINED HEREIN CONFIDENTIAL AND SHALL PROTECT SAME IN WHOLE OR IN PART FROM DISCLOSURE AND DISSEMINATION TO ALL THIRD PARTIES.

DATE: 11-21-96	DWN:	CHK'D:	APPD:
SCALE: N/A			

T-3 (T-1) LED, RED DIFFUSED

DRAWING NUMBER
SLX-LX3054HD

REV

MS/DK