REV	DATE	DESCRIPTION	APPROVAL	REF:
0	23-JUN-99	ORIGINAL RELEASE		EC9925-02
A	7-MAR-03	REMOVE: 'PLASTIC OR ABS UL94V-0' FROM NOTE.		

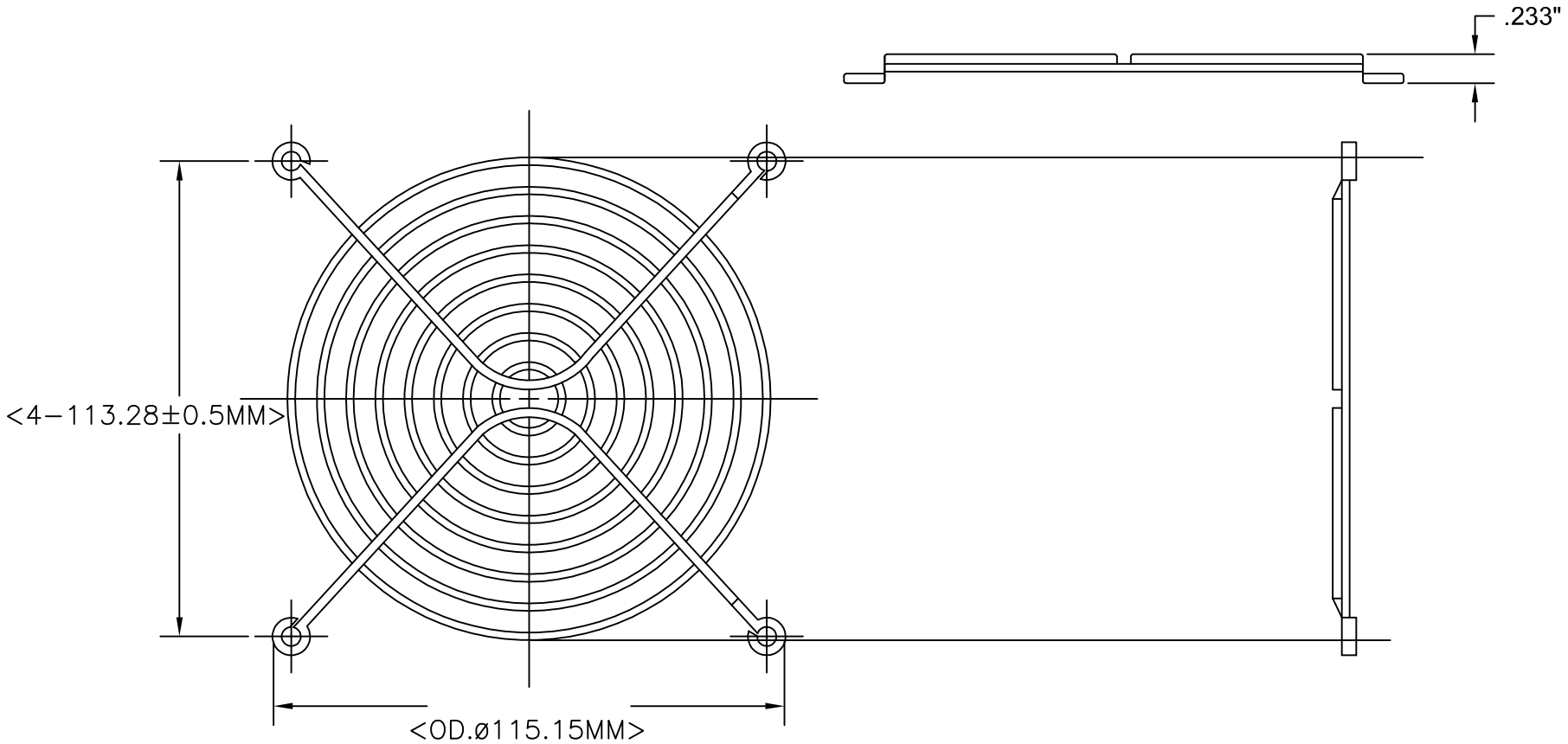

MAT'L:
WIRE, STEEL C1008 ELECTROPLATED BRIGHT NICKEL CHROME, CLEAR ZINC, ELECTRO DEPOSIT. PLATING THICKNESS = .0005" MIN.

WELD JOINTS TO WITHSTAND MIN. 70LBS. SEPARATION FORCE TO MEET UL/CSA STANDARDS. CONFORMS TO U.L.Ø1/4" PLUG GAGE TEST

UNLESS NOTED:
TOLERANCES SHALL BE
.X = 0.300
.XX = 0.150
.XXX = 0.075
ANGULAR = 0.2 DD

THIS DRAWING IS THE PROPERTY OF SANYO DENKI AMERICA, INC. AND SHALL BE DEEMED AS PROPRIETARY INFORMATION. USE OF ANY INFORMATION CONTAINED HEREIN SHALL BE PROHIBITED WITHOUT WRITTEN PERMISSION OF SANYO DENKI AMERICA, INC.

SANYO DENKI *AMERICA*
TORRANCE, CALIFORNIA

DWG NO: KM-127	
SCALE: NONE	REV: A
DRAWN BY: BEN	DATE: 17-MAR-03
APPROVED: TY	DATE: 17-MAR-03
APPROVED:	DATE:

FILE: C:\AR13\WINN\KM127.DWG